By Others: That Elusive Subcontractor Responsible for Transitions

Andrew A. Dunlap, AIA

SMITHGROUP JJR
building technology studio

Review of Assembly Environmental Separators

Common Enclosure Assembly Discontinuities

Common System Transition Methods

Gain an understanding of how…

…transitions impact building enclosure performance.

…poor transitions can result in reduced energy efficiency.

…poor transitions can increase the risk of condensation.

…various compatibility and logistical issues impact options available to achieve proper transition details.

Environmental Separators

They go by many names

- Control Layers (BSC, Joe Lstiburek and John Straube)
- Planes of Performance (Judd Peterson)
- Environmental Separators (?????)
- Barriers
- Retarders
- …

Breaking Down The Barriers

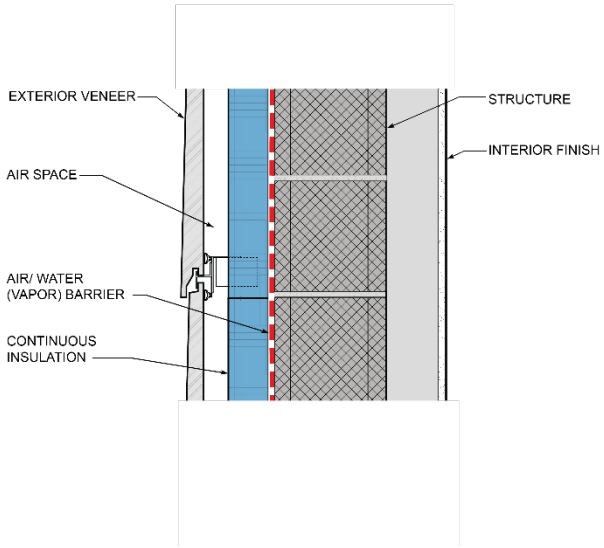

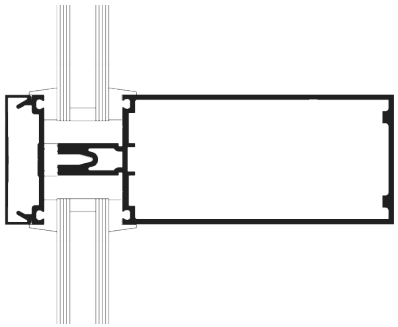

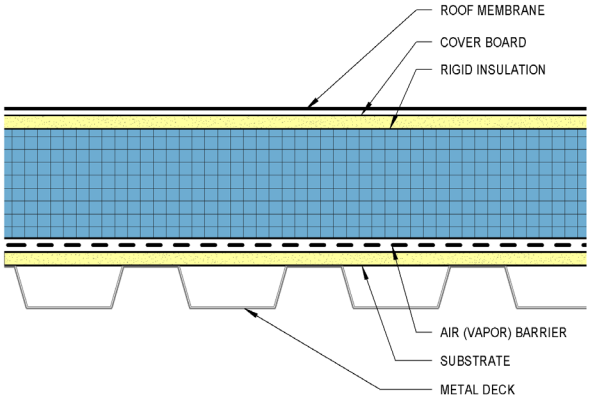

- Water
- Air
- Thermal
- Vapor

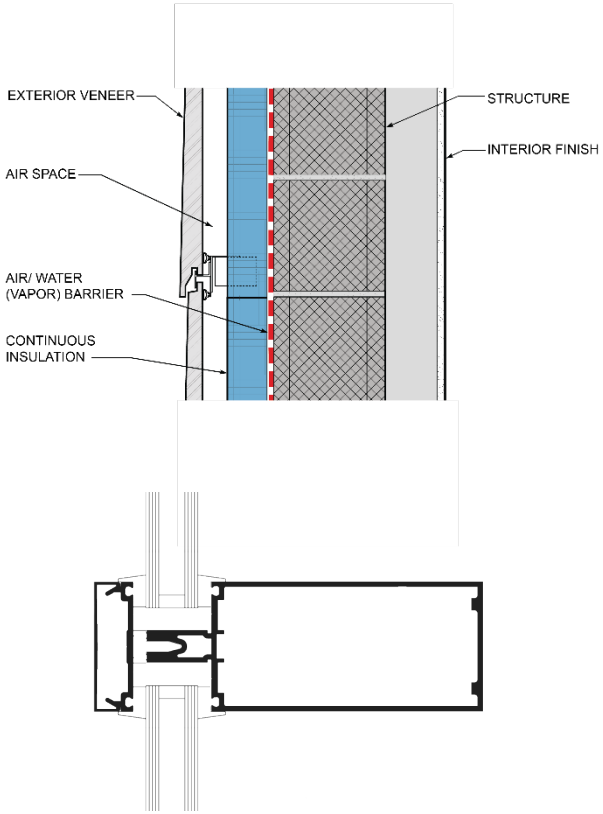

PROTECT THE STRUCTURE

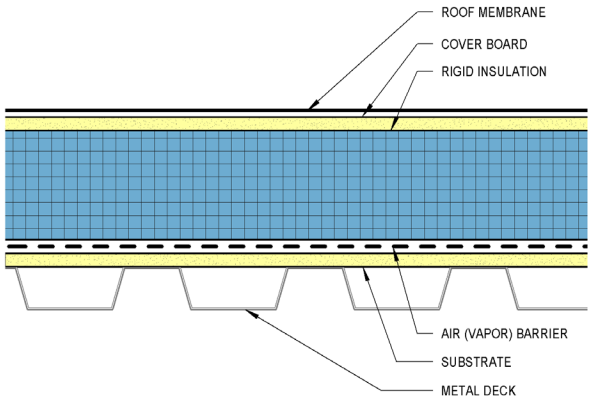

Understand that Perfection is IMPOSSIBLE.

Redundant Systems = long term durability.

Two Lines of Defense!!!

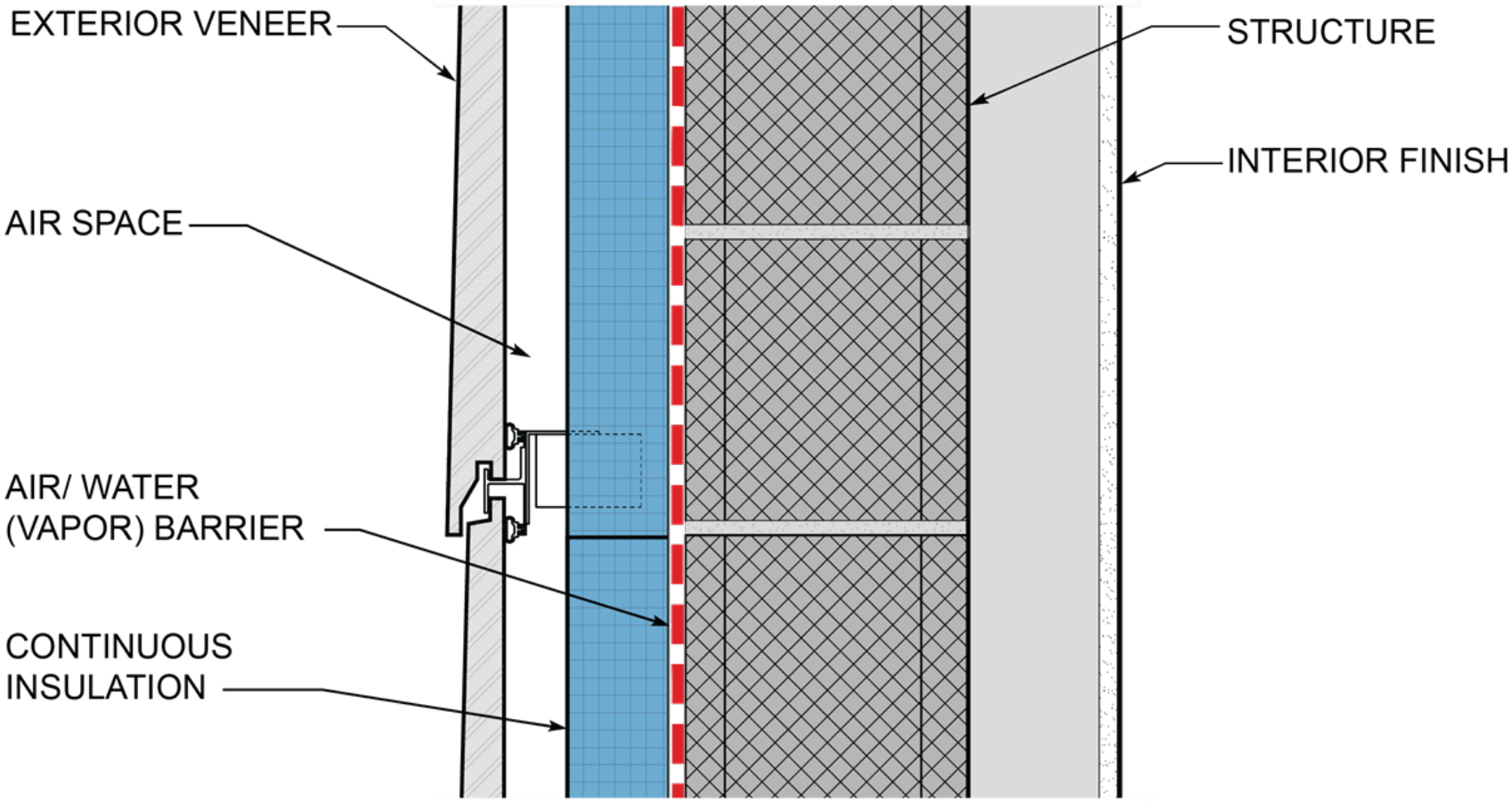
EXTERIOR VENEER
STRUCTURE
INTERIOR FINISH
AIR SPACE
AIR/ WATER
(VAPOR) BARRIER
CONTINUOUS
INSULATION

WATER

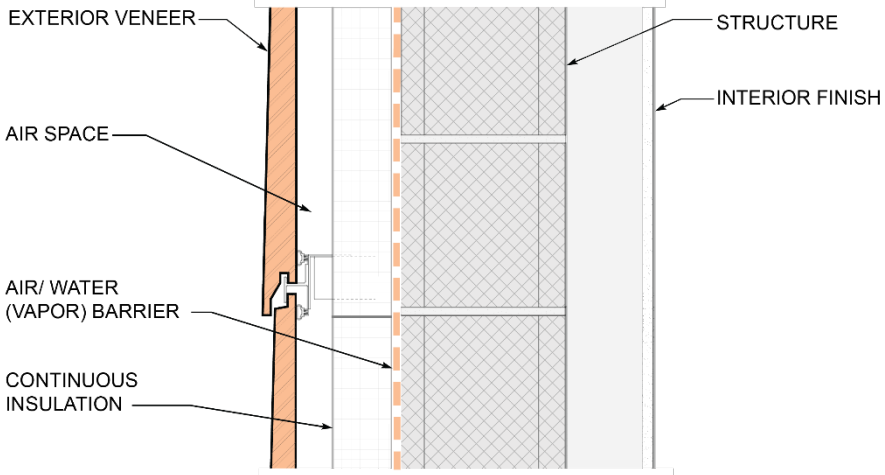

AIR

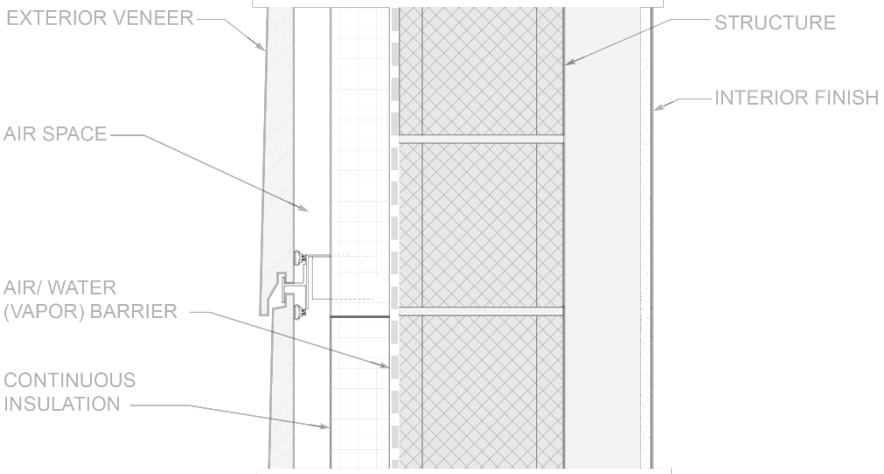

THERMAL

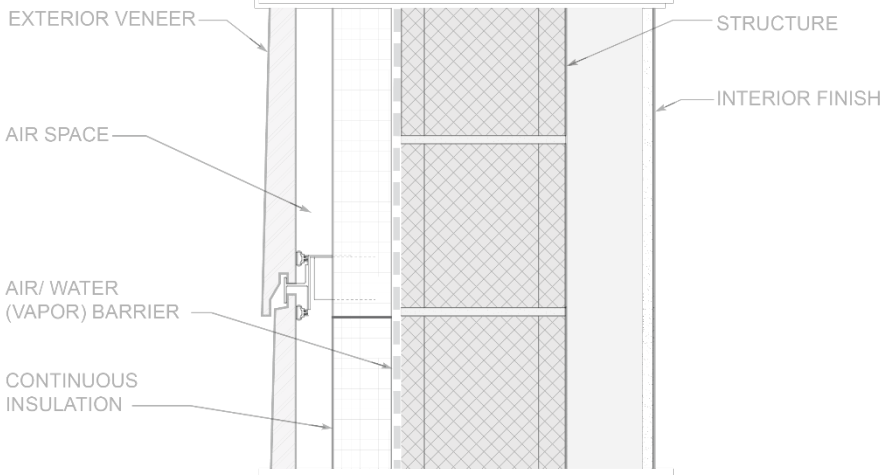

VAPOR

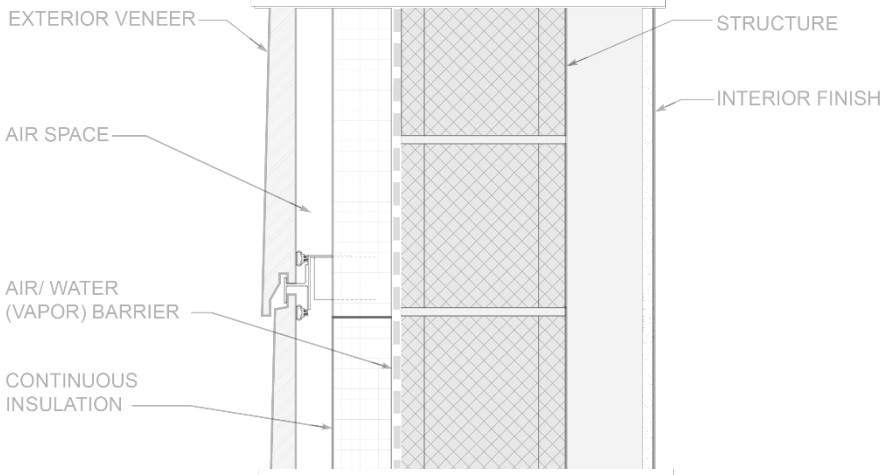

WATER

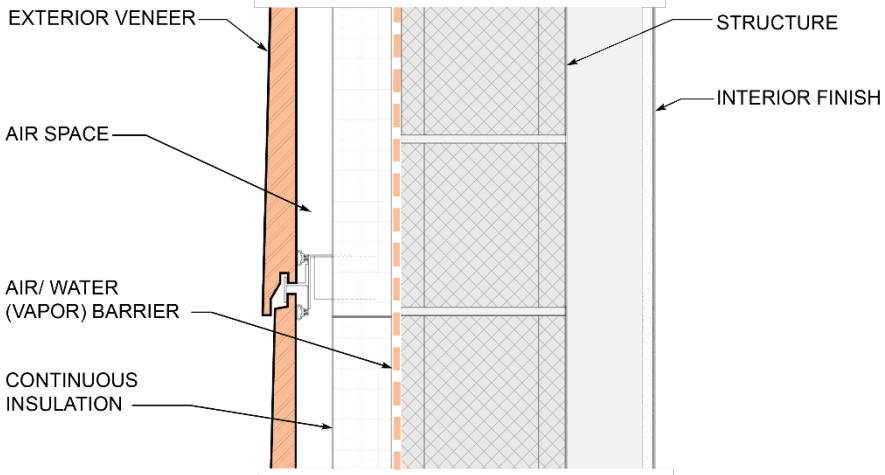

AIR

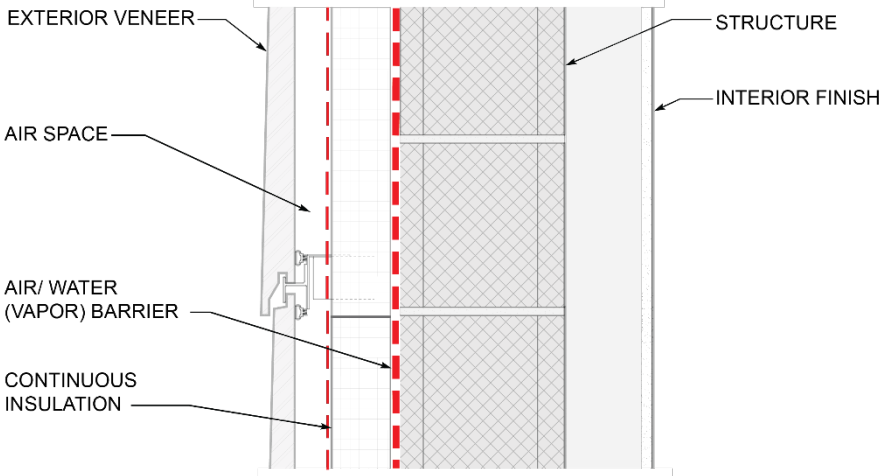

THERMAL

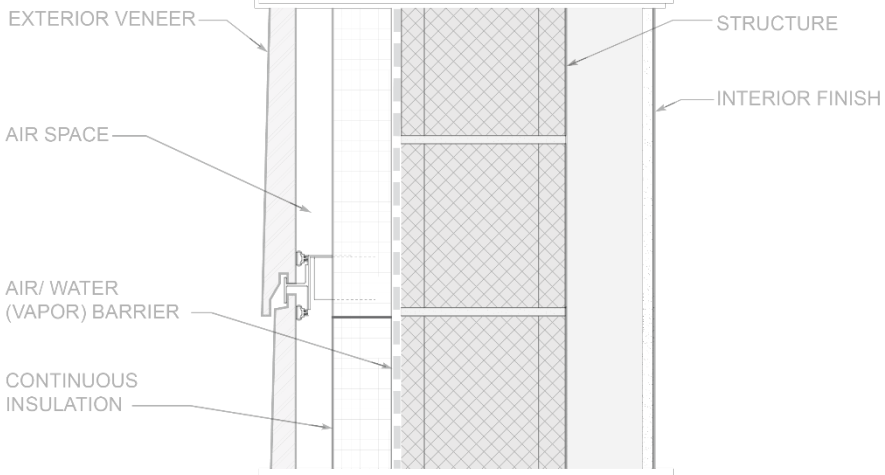

VAPOR

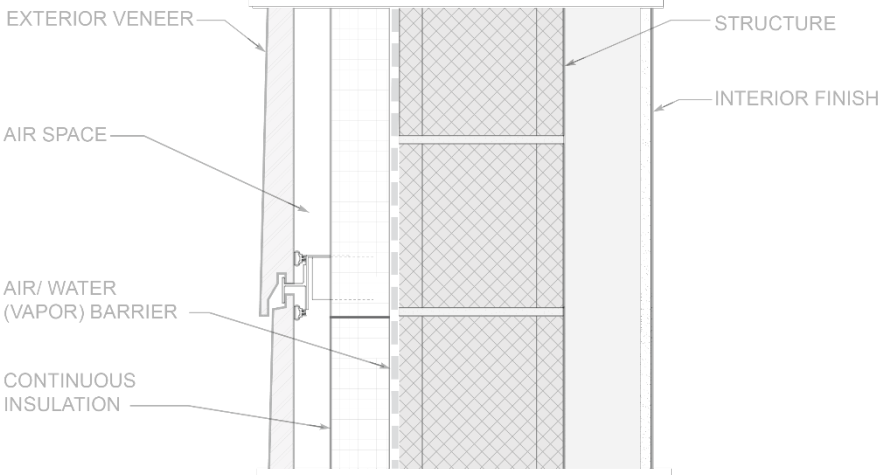

WATER

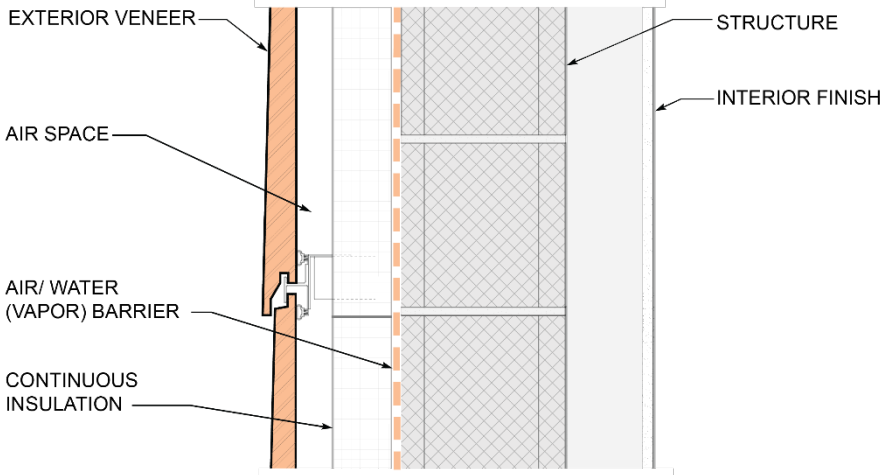

AIR

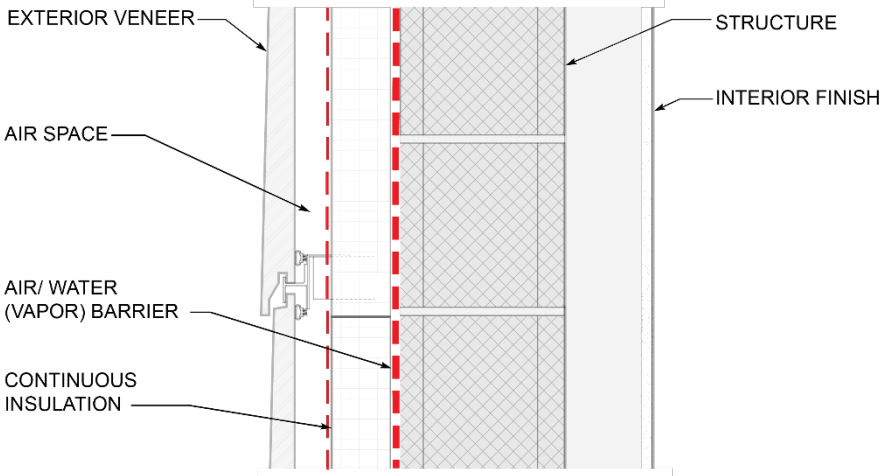

THERMAL

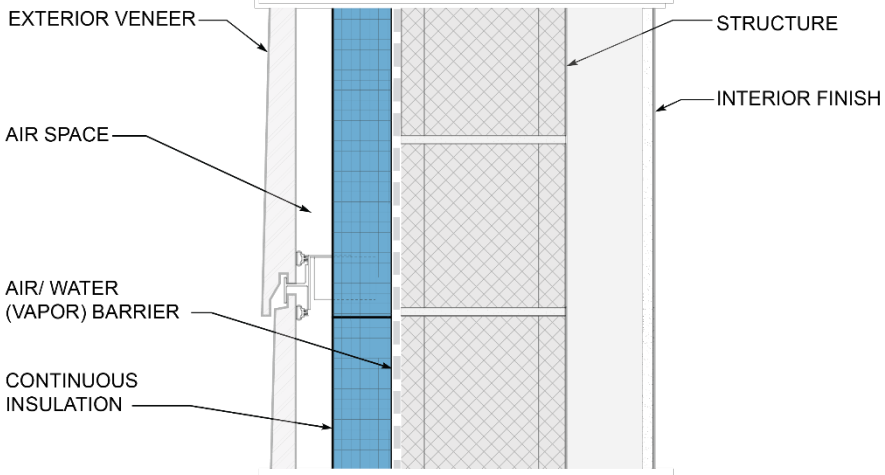

VAPOR

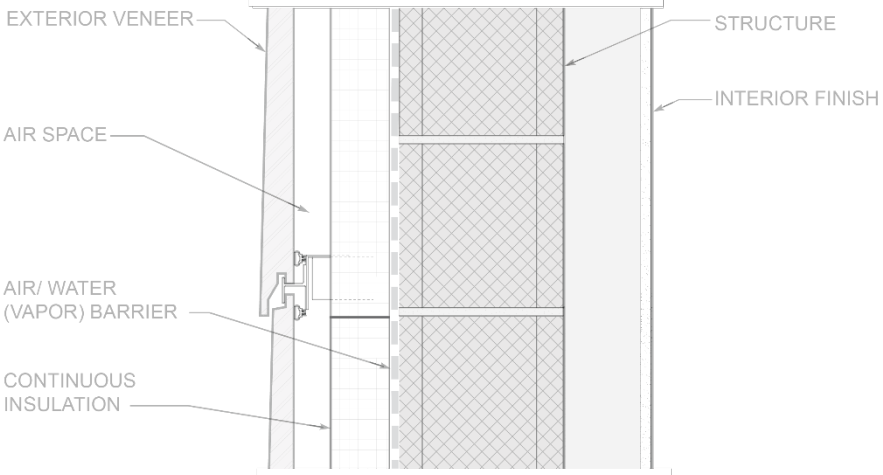

WATER

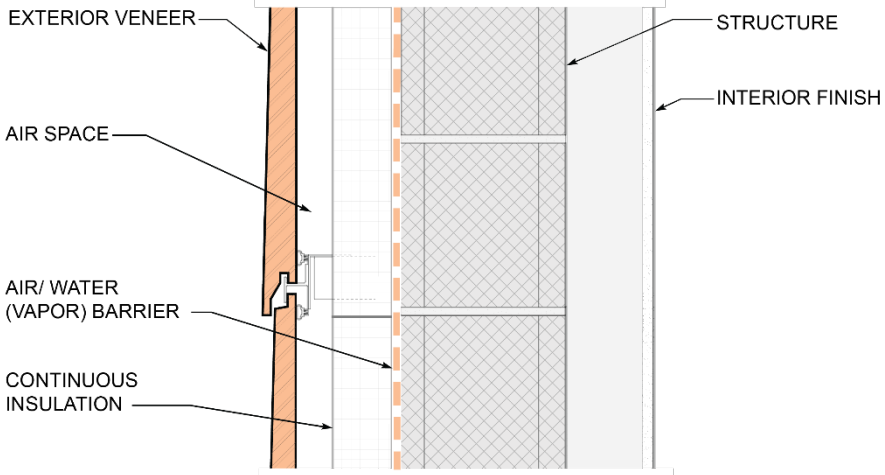

AIR

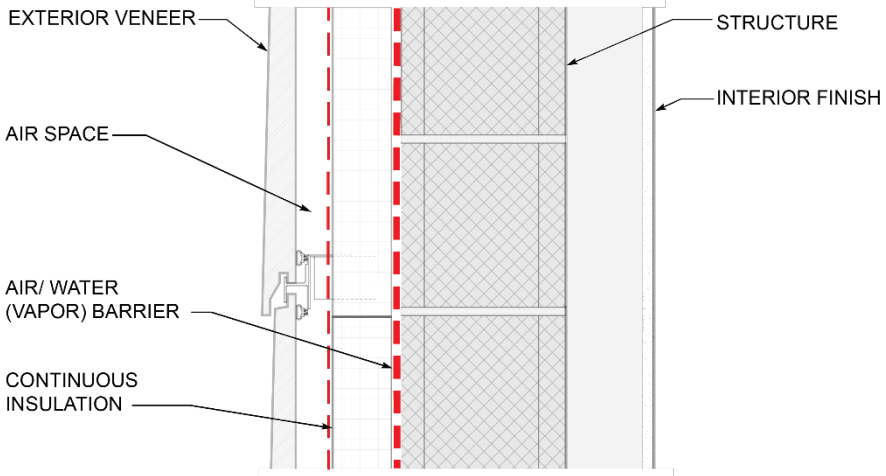

THERMAL

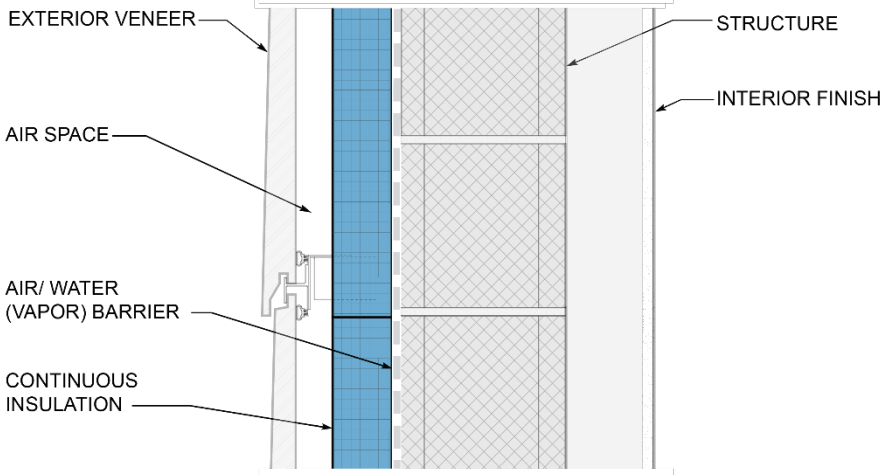

VAPOR

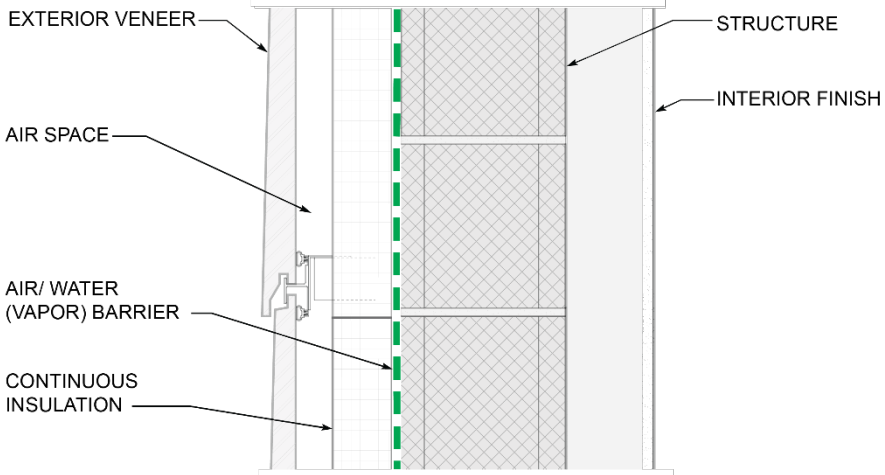

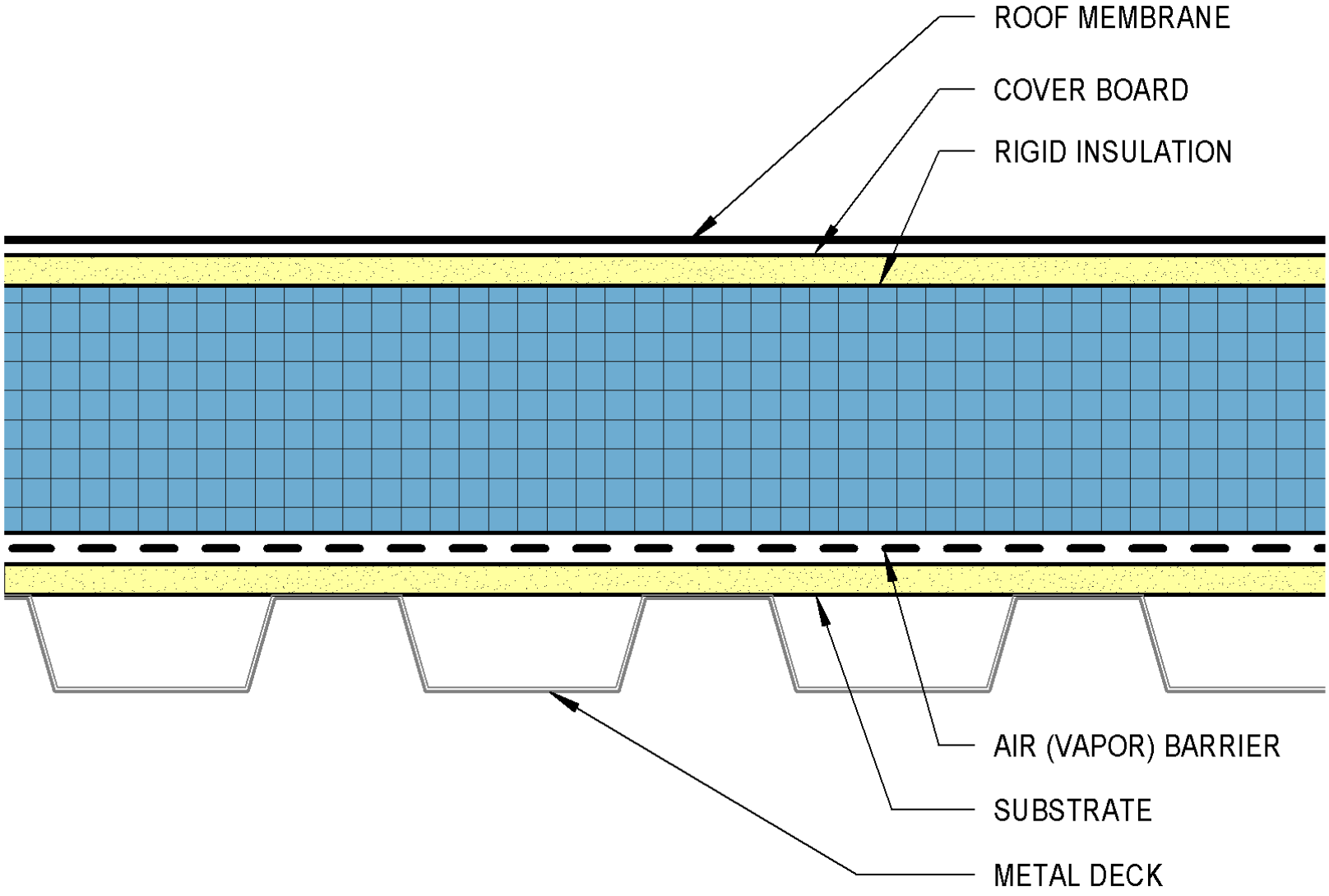
ROOF MEMBRANE
COVER BOARD
RIGID INSULATION
AIR (VAPOR) BARRIER
SUBSTRATE
METAL DECK

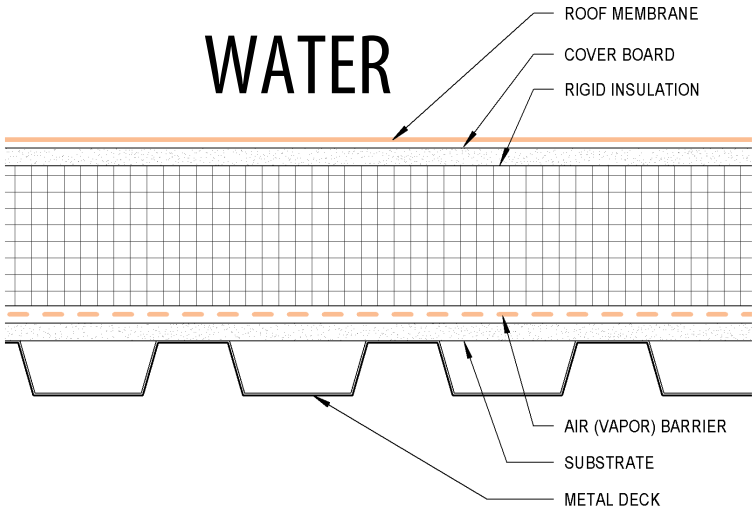
WATER
ROOF MEMBRANE
COVER BOARD
RIGID INSULATION
AIR (VAPOR) BARRIER
SUBSTRATE
METAL DECK

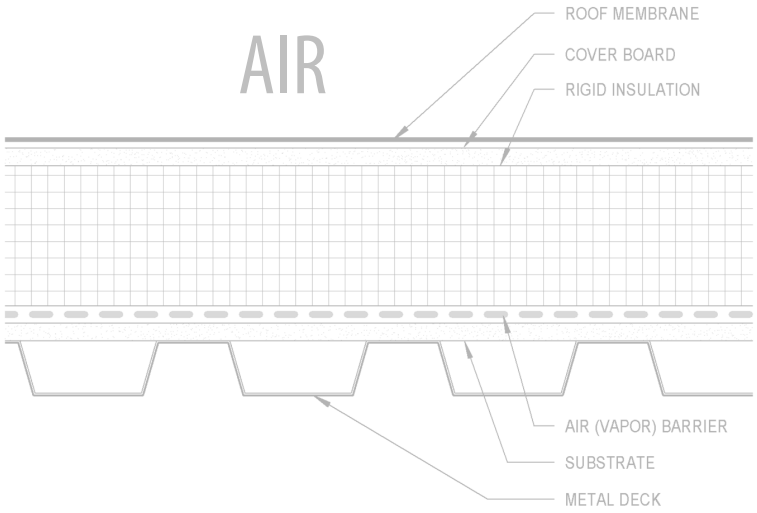
AIR
ROOF MEMBRANE
COVER BOARD
RIGID INSULATION
AIR (VAPOR) BARRIER
SUBSTRATE
METAL DECK

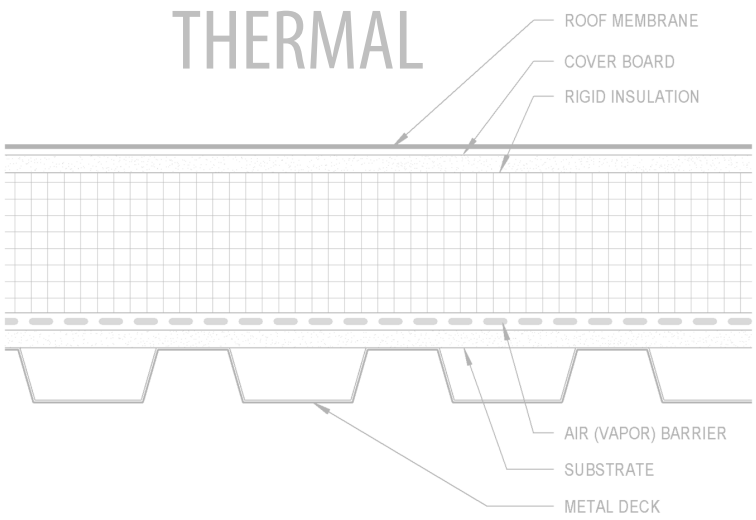
THERMAL
ROOF MEMBRANE
COVER BOARD
RIGID INSULATION
AIR (VAPOR) BARRIER
SUBSTRATE
METAL DECK

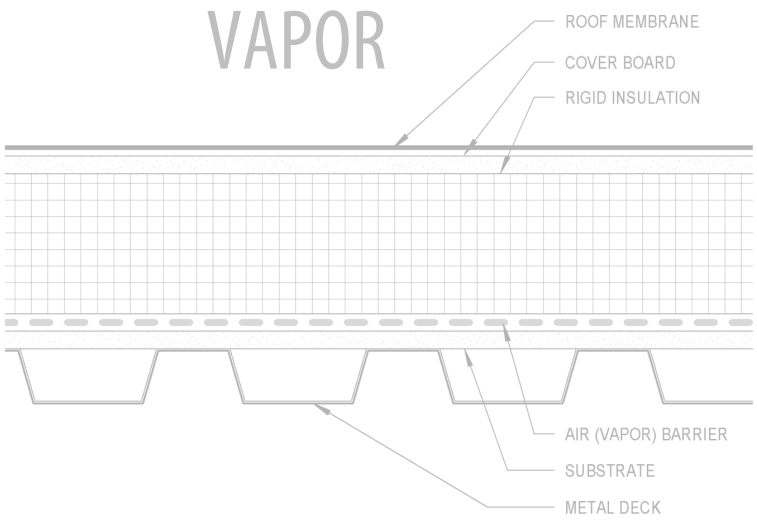
VAPOR
ROOF MEMBRANE
COVER BOARD
RIGID INSULATION
AIR (VAPOR) BARRIER
SUBSTRATE
METAL DECK

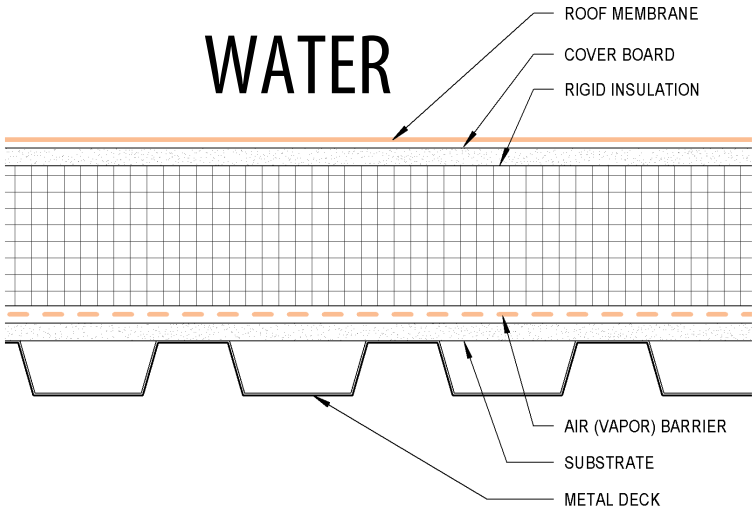
WATER
ROOF MEMBRANE
COVER BOARD
RIGID INSULATION
AIR (VAPOR) BARRIER
SUBSTRATE
METAL DECK

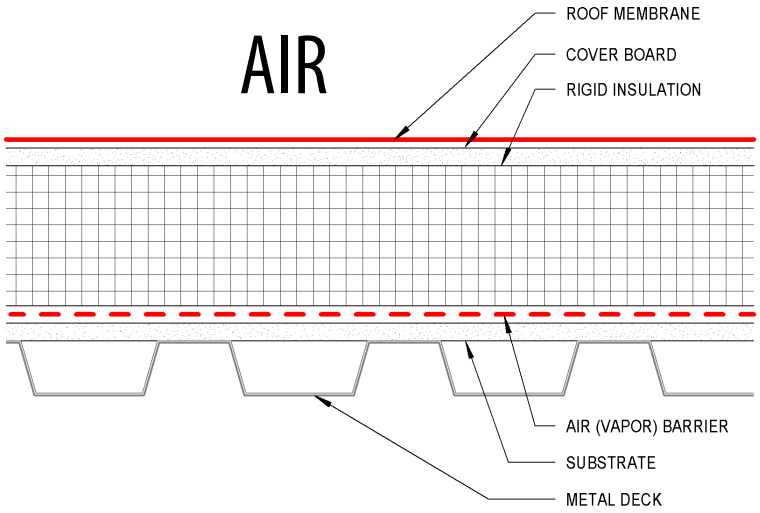
AIR
ROOF MEMBRANE
COVER BOARD
RIGID INSULATION
AIR (VAPOR) BARRIER
SUBSTRATE
METAL DECK

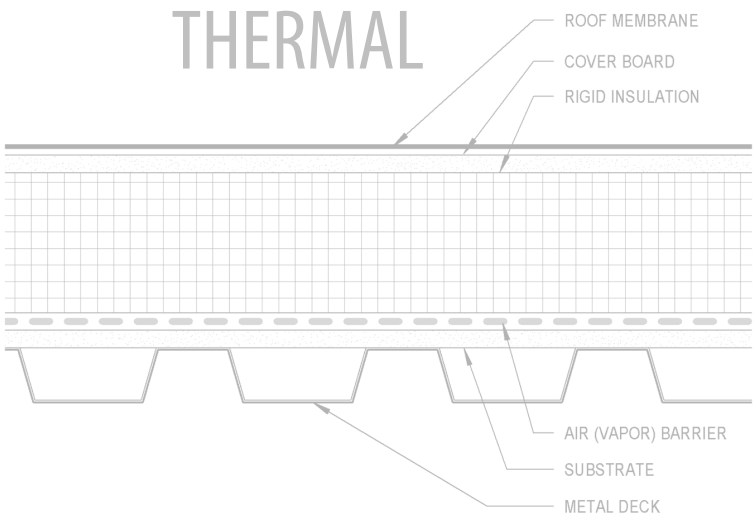
THERMAL
ROOF MEMBRANE
COVER BOARD
RIGID INSULATION
AIR (VAPOR) BARRIER
SUBSTRATE
METAL DECK

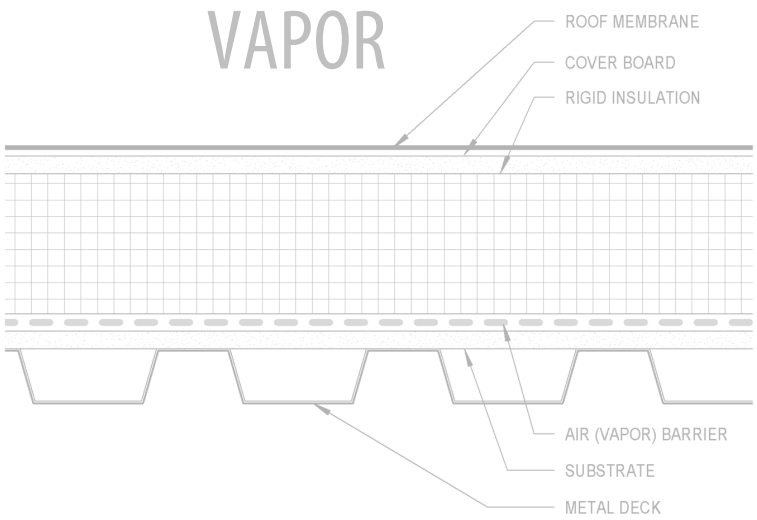
VAPOR
ROOF MEMBRANE
COVER BOARD
RIGID INSULATION
AIR (VAPOR) BARRIER
SUBSTRATE
METAL DECK

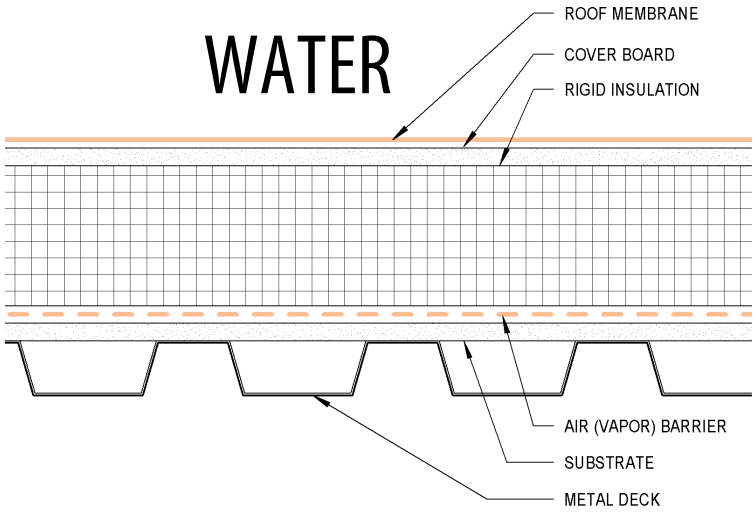
WATER
ROOF MEMBRANE
COVER BOARD
RIGID INSULATION
AIR (VAPOR) BARRIER
SUBSTRATE
METAL DECK

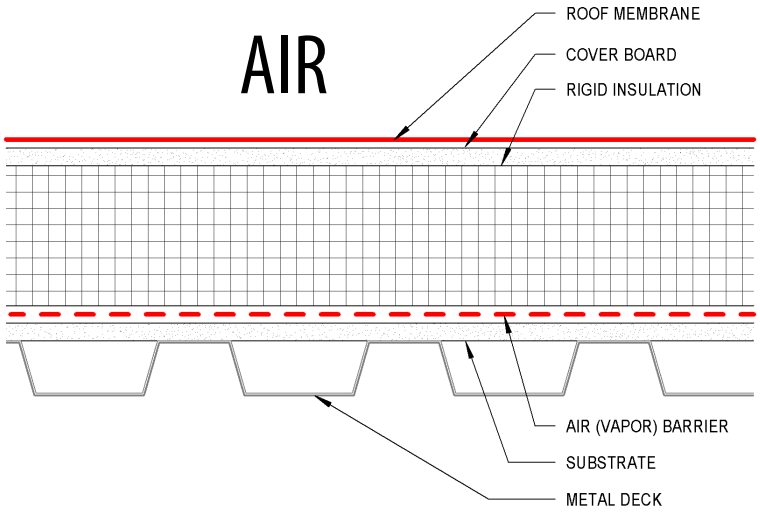
AIR
ROOF MEMBRANE
COVER BOARD
RIGID INSULATION
AIR (VAPOR) BARRIER
SUBSTRATE
METAL DECK

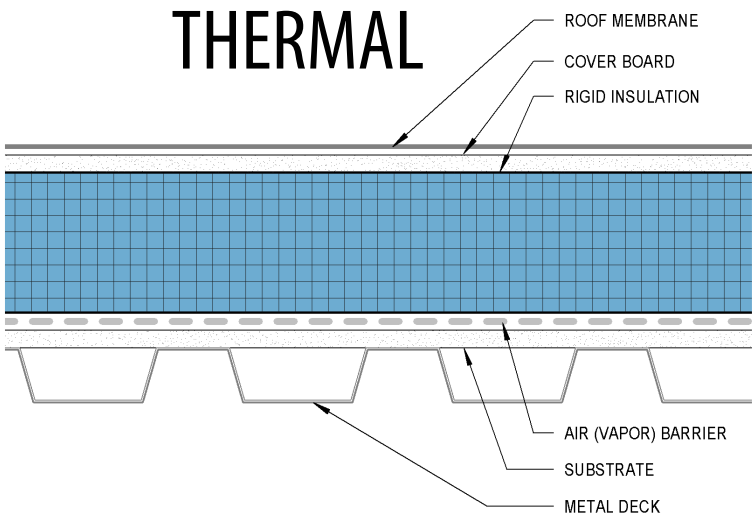
THERMAL
ROOF MEMBRANE
COVER BOARD
RIGID INSULATION
AIR (VAPOR) BARRIER
SUBSTRATE
METAL DECK

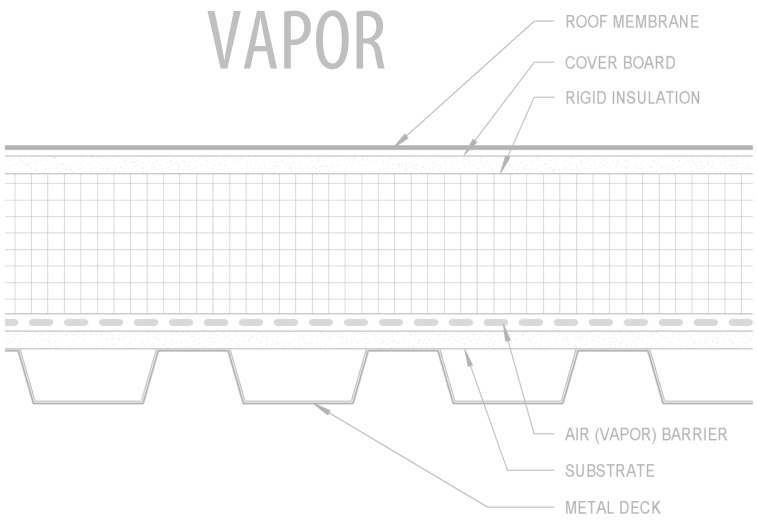
VAPOR
ROOF MEMBRANE
COVER BOARD
RIGID INSULATION
AIR (VAPOR) BARRIER
SUBSTRATE
METAL DECK

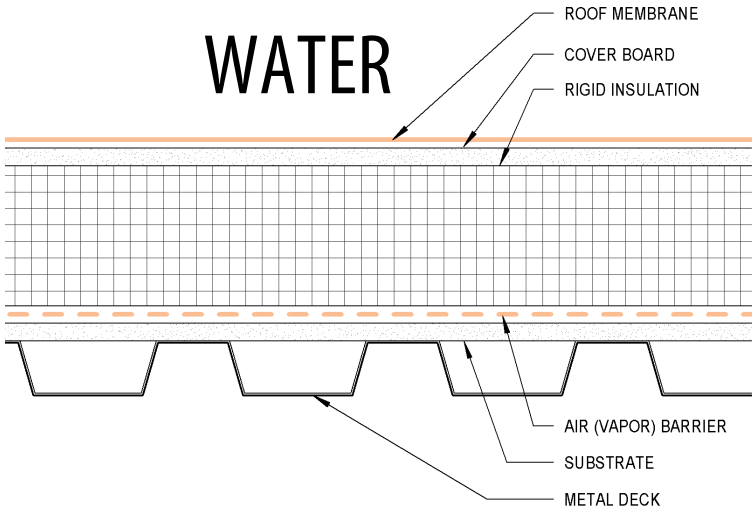
WATER
ROOF MEMBRANE
COVER BOARD
RIGID INSULATION
AIR (VAPOR) BARRIER
SUBSTRATE
METAL DECK

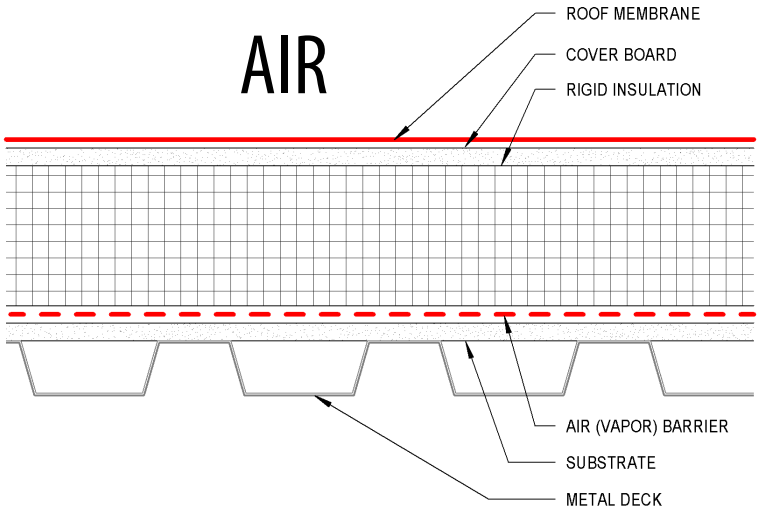
AIR
ROOF MEMBRANE
COVER BOARD
RIGID INSULATION
AIR (VAPOR) BARRIER
SUBSTRATE
METAL DECK

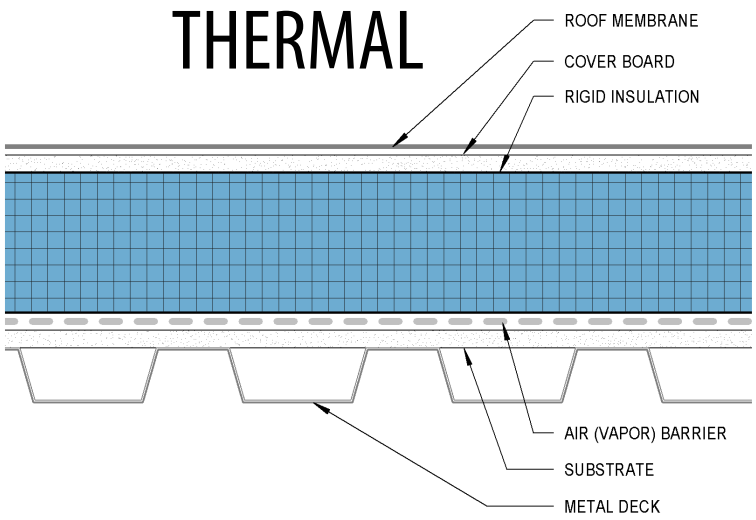
THERMAL
ROOF MEMBRANE
COVER BOARD
RIGID INSULATION
AIR (VAPOR) BARRIER
SUBSTRATE
METAL DECK

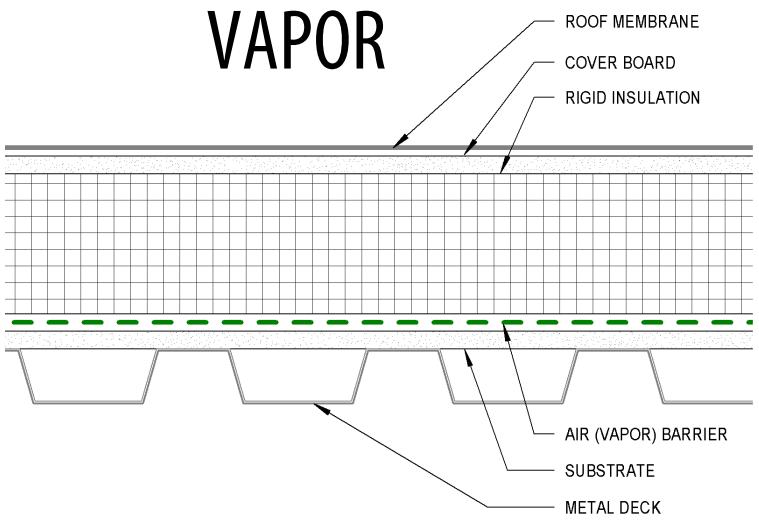
VAPOR
ROOF MEMBRANE
COVER BOARD
RIGID INSULATION
AIR (VAPOR) BARRIER
SUBSTRATE
METAL DECK

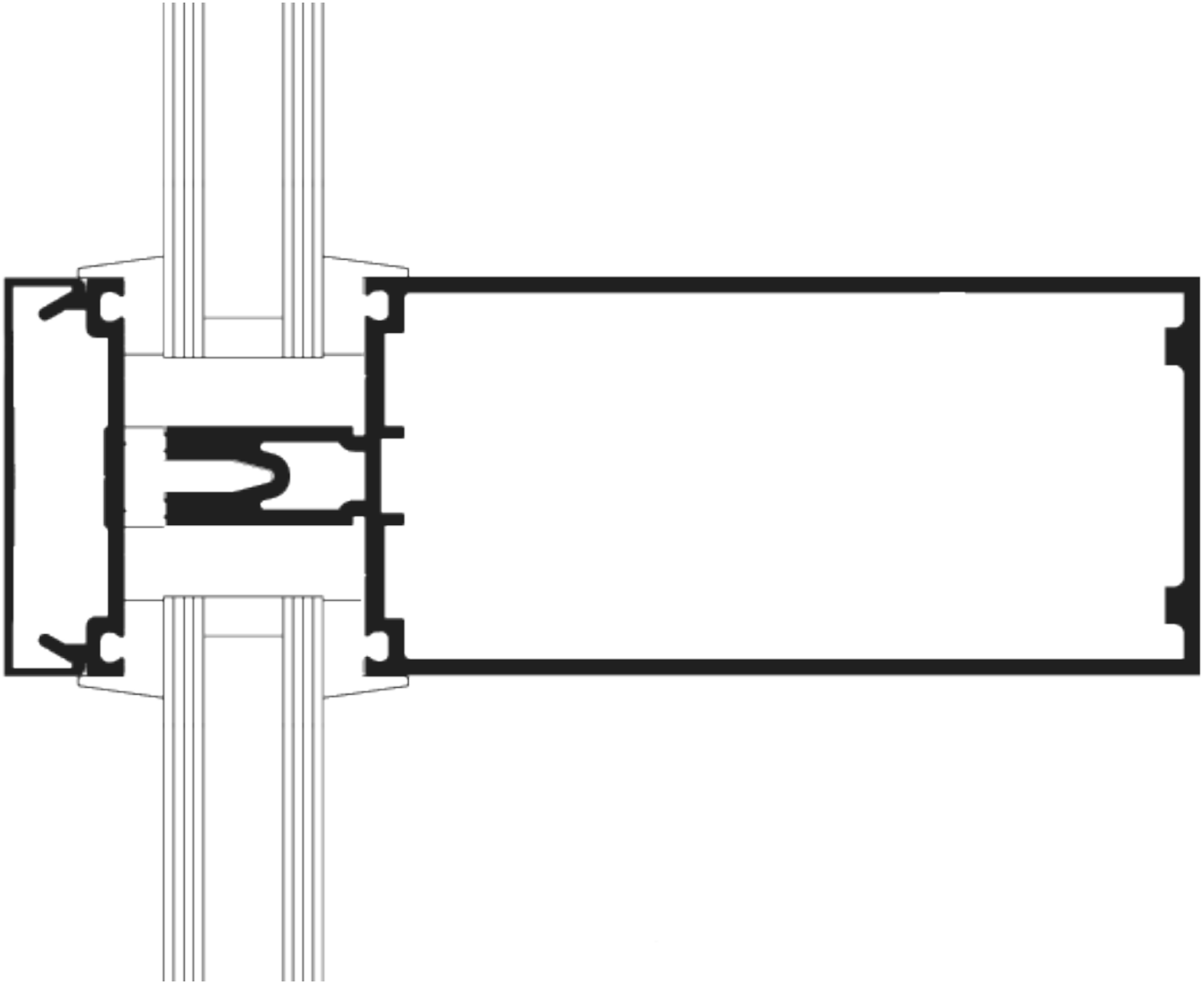

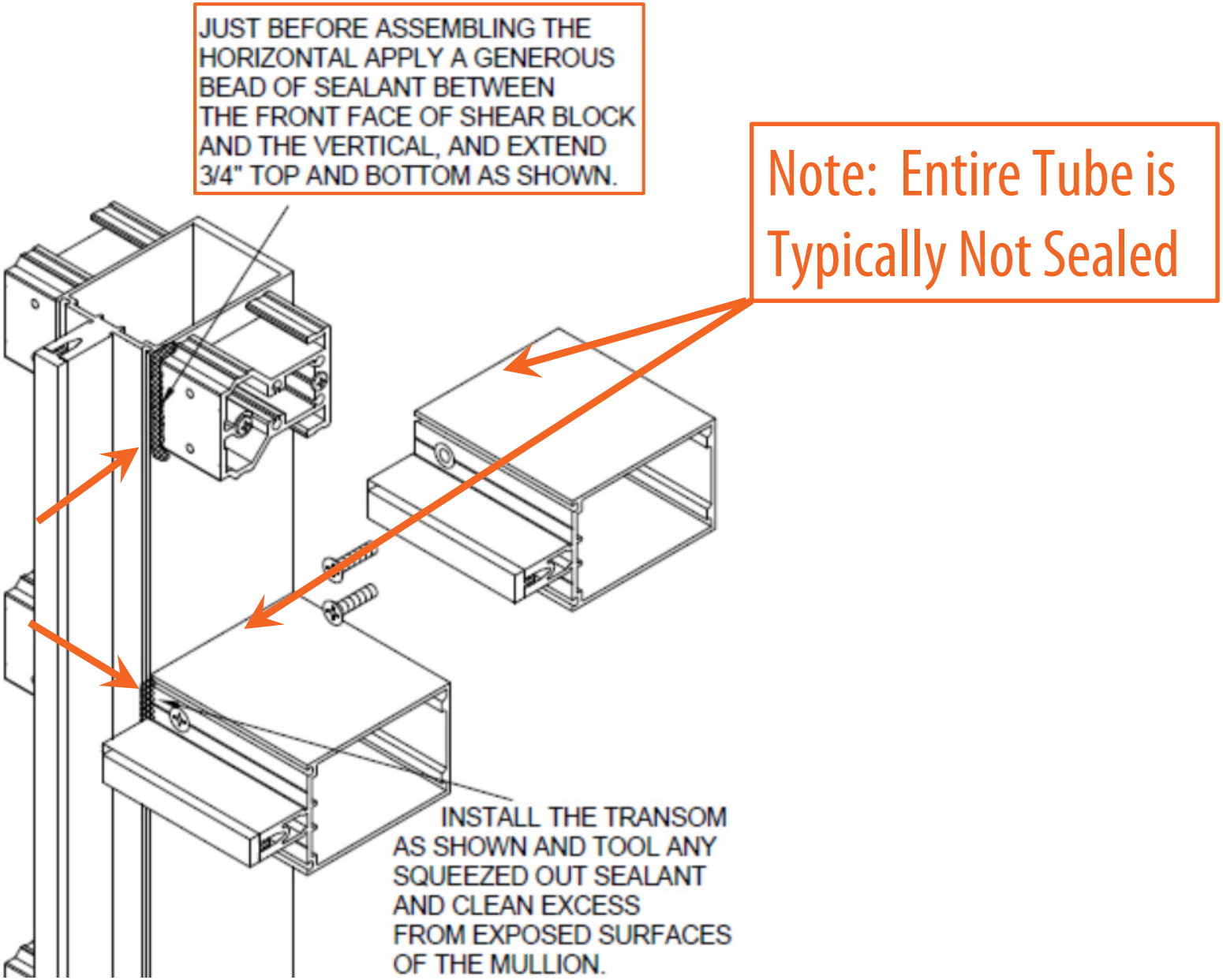

Courtesy of Kawneer

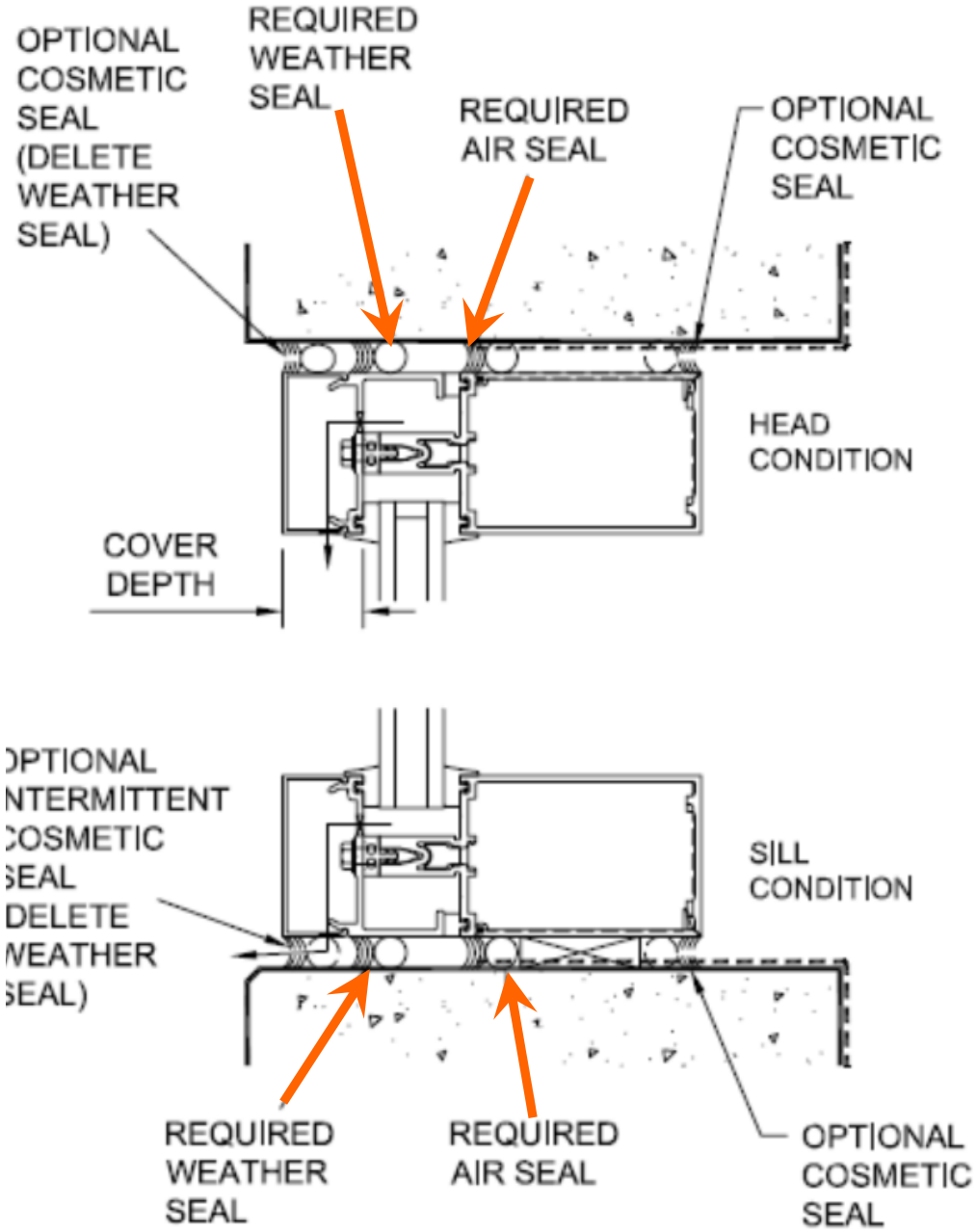

Courtesy of Kawneer

WATER

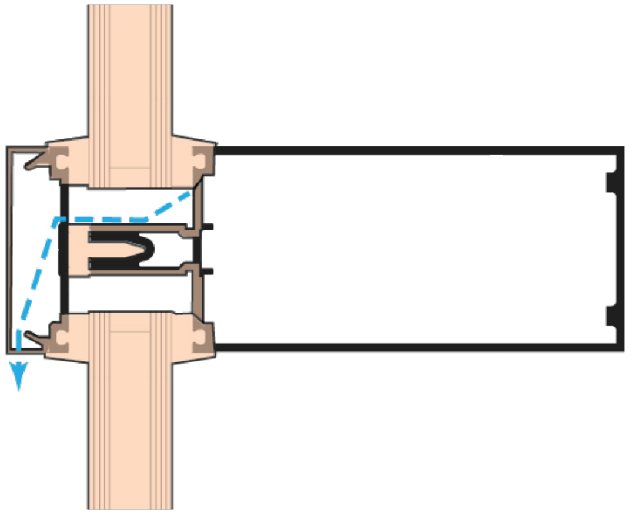

AIR

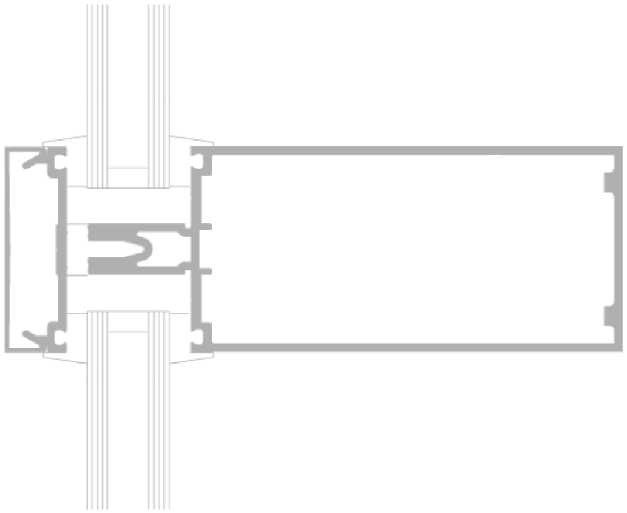

THERMAL

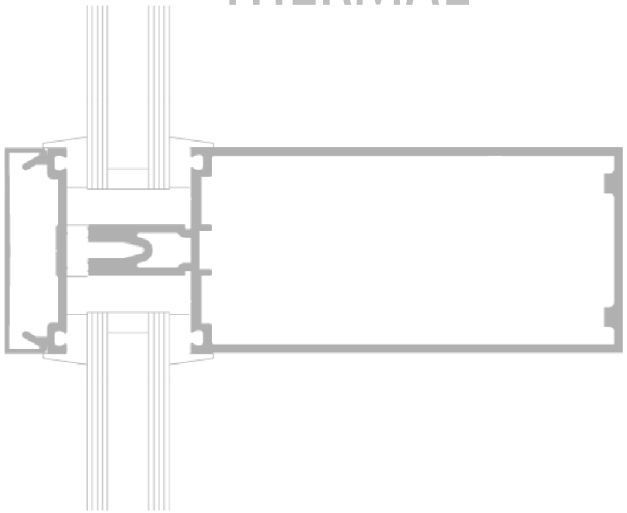

VAPOR

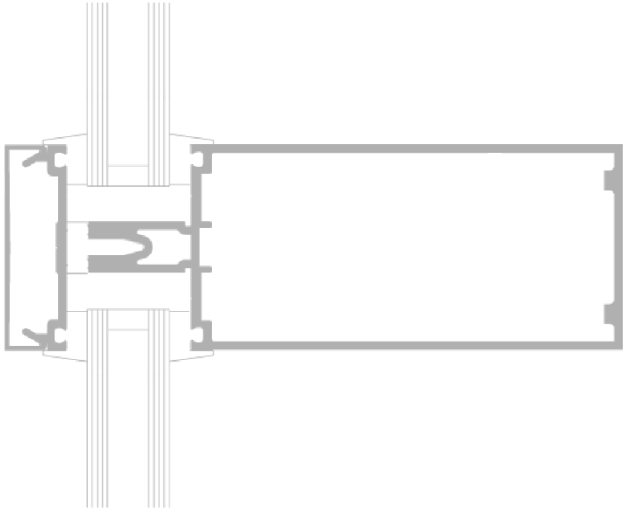

WATER

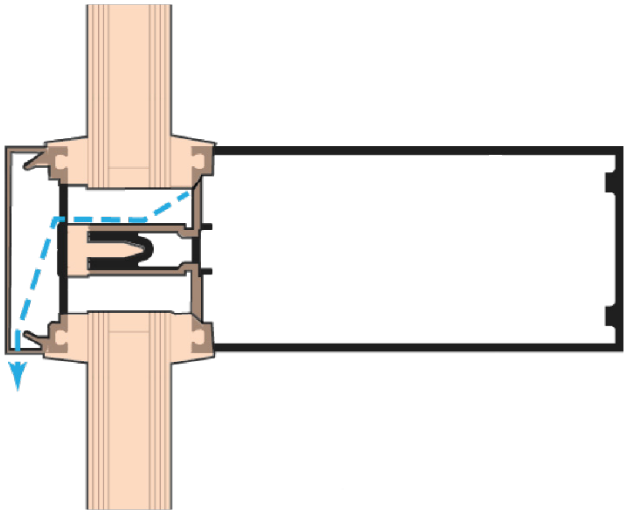

AIR

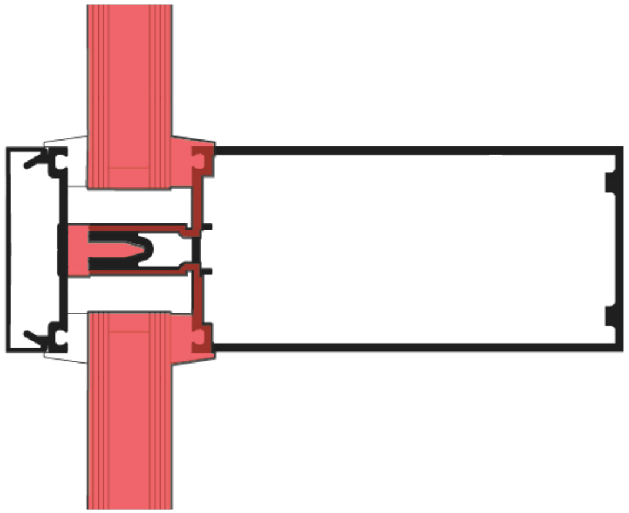

THERMAL

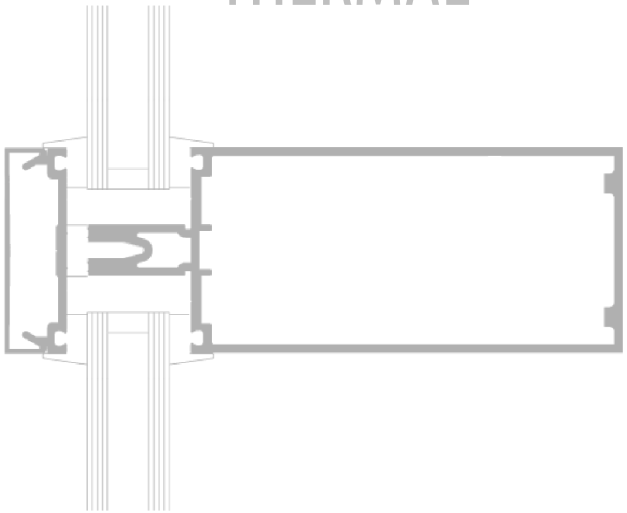

VAPOR

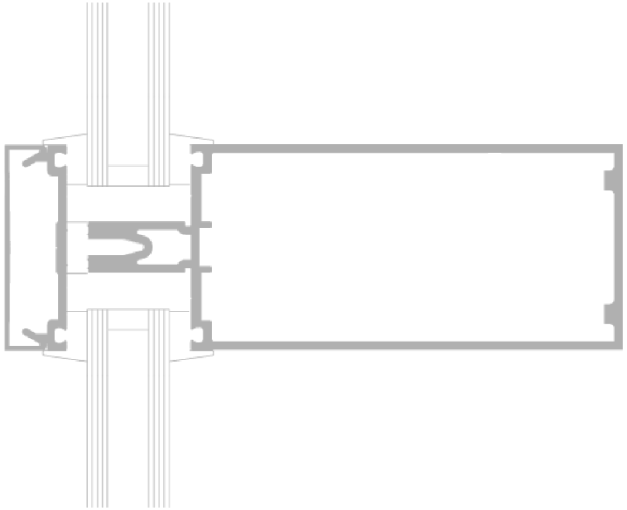

WATER

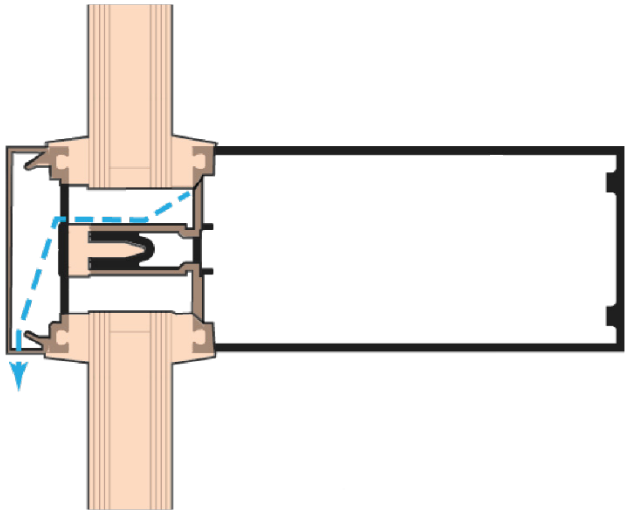

AIR

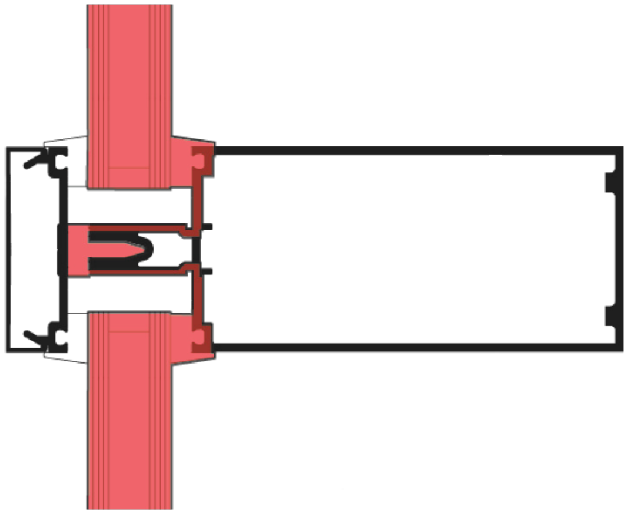

THERMAL

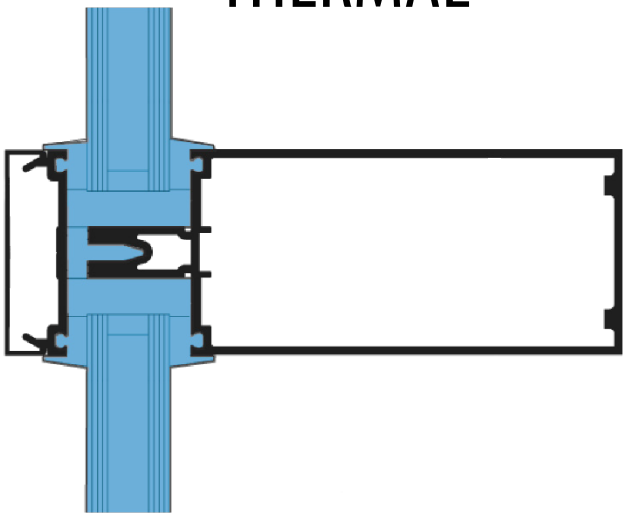

VAPOR

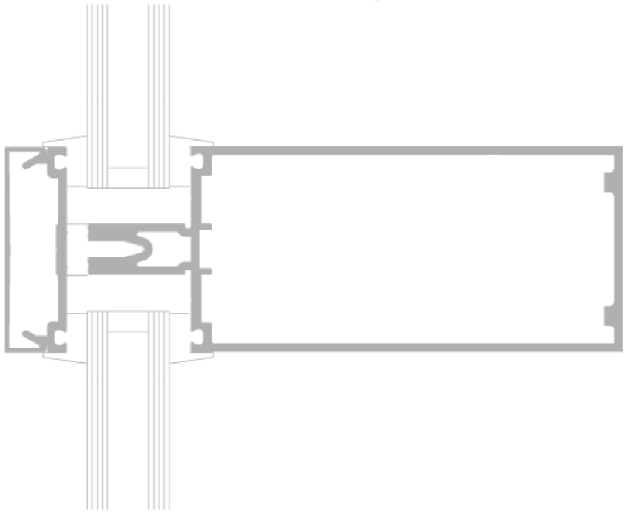

WATER

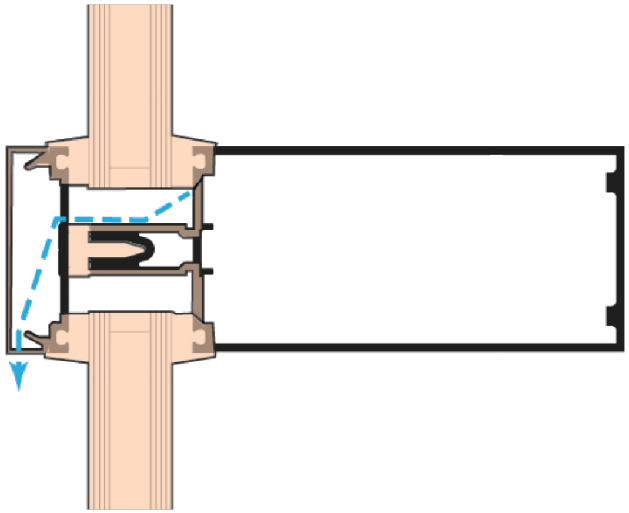

AIR

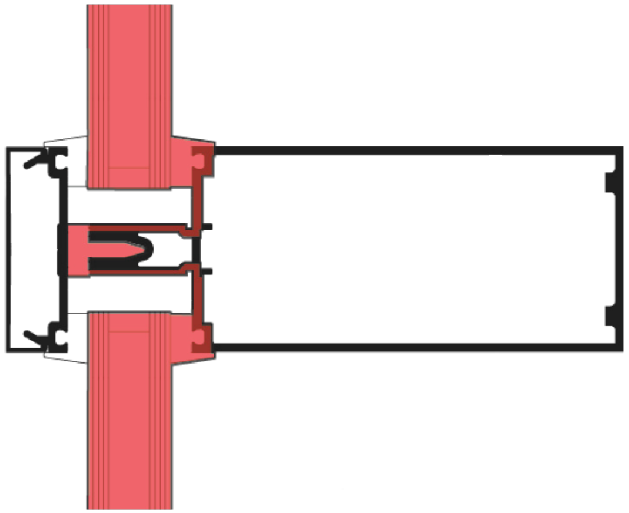

THERMAL

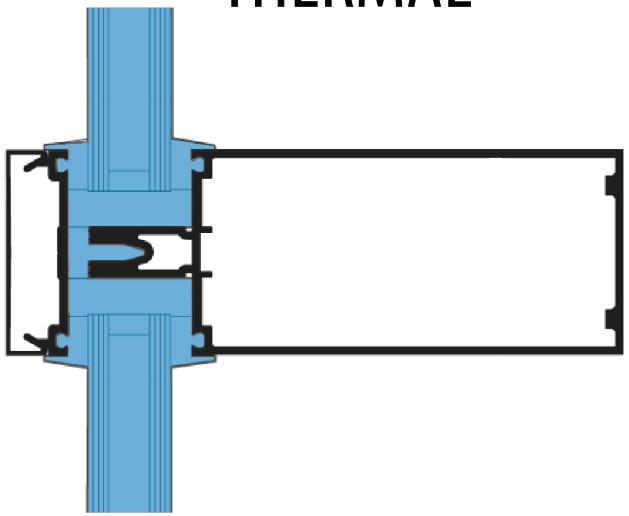

VAPOR

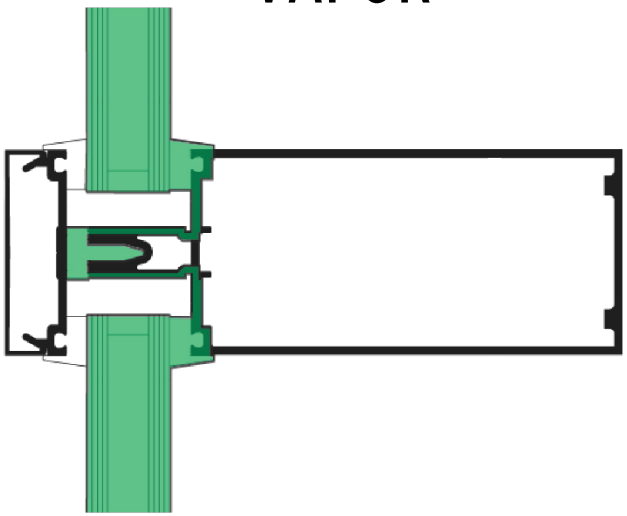

WHY DOES THIS MATTER?

THEY MUST BE CONTINUOUS…

…TO BE EFFECTIVE

Lack of Continuity may lead to…

- Water leakage
- Air leakage
- Thermal bridging
- Poor energy performance
- Condensation
- Durability problems
- Mold
- Corrosion
- Rot
- Reversion

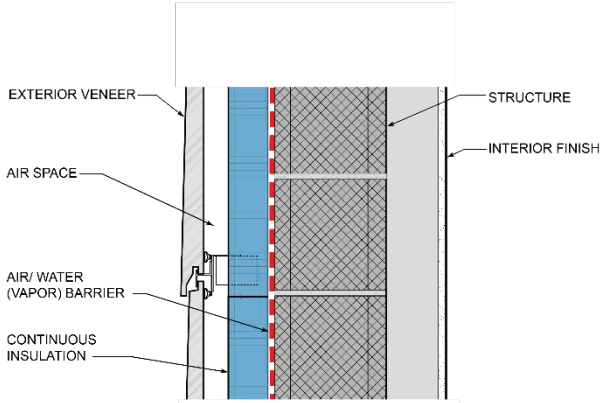

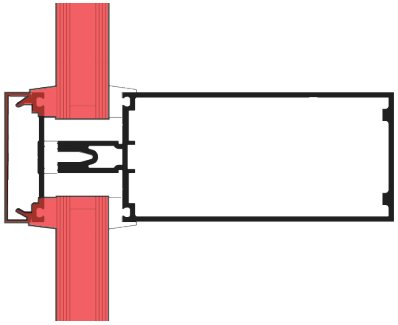

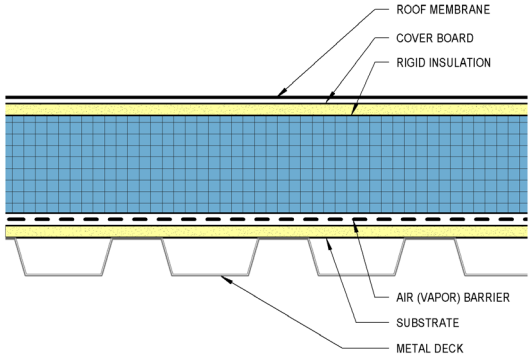

Discontinuity Occurs at…

- Transitions
- Steel Studs
- Lintels and Brick Relief Angles
- Brick Ties (use stainless steel to minimize)
- Roof Fasteners
- Cladding Attachment Systems
- Spandrels
- Floor and Roof Slabs
- Balconies

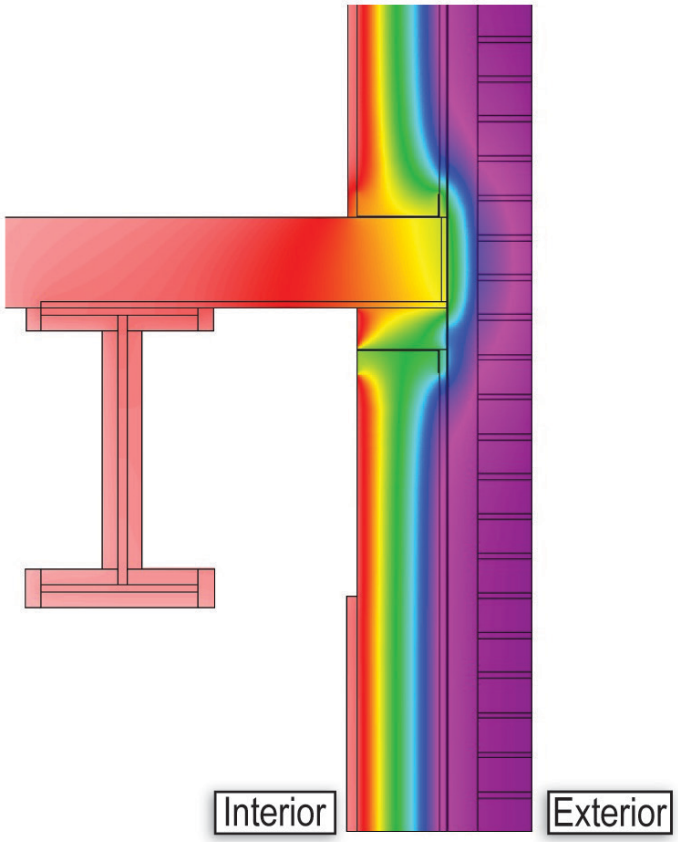

Water Discontinuity

Air Discontinuity

Air Leakage Energy Modeling

Base Case Performance (Current Code Minimum)

- Roof = U-0.048, (R-20)
- Wall = U-0.064, R13 + R7.5ci
- Window = U-0.45, R-2.2
- Window SC = 0.46
- WWR = 40%

Modified Enclosure Component

- **Leaky: 2.5 ACH (0.66 cfm/sf)**
- **Normal: 1.0 ACH (0.27 cfm/sf)**
- **Tight: 0.3 ACH (0.08 cfm/sf)**

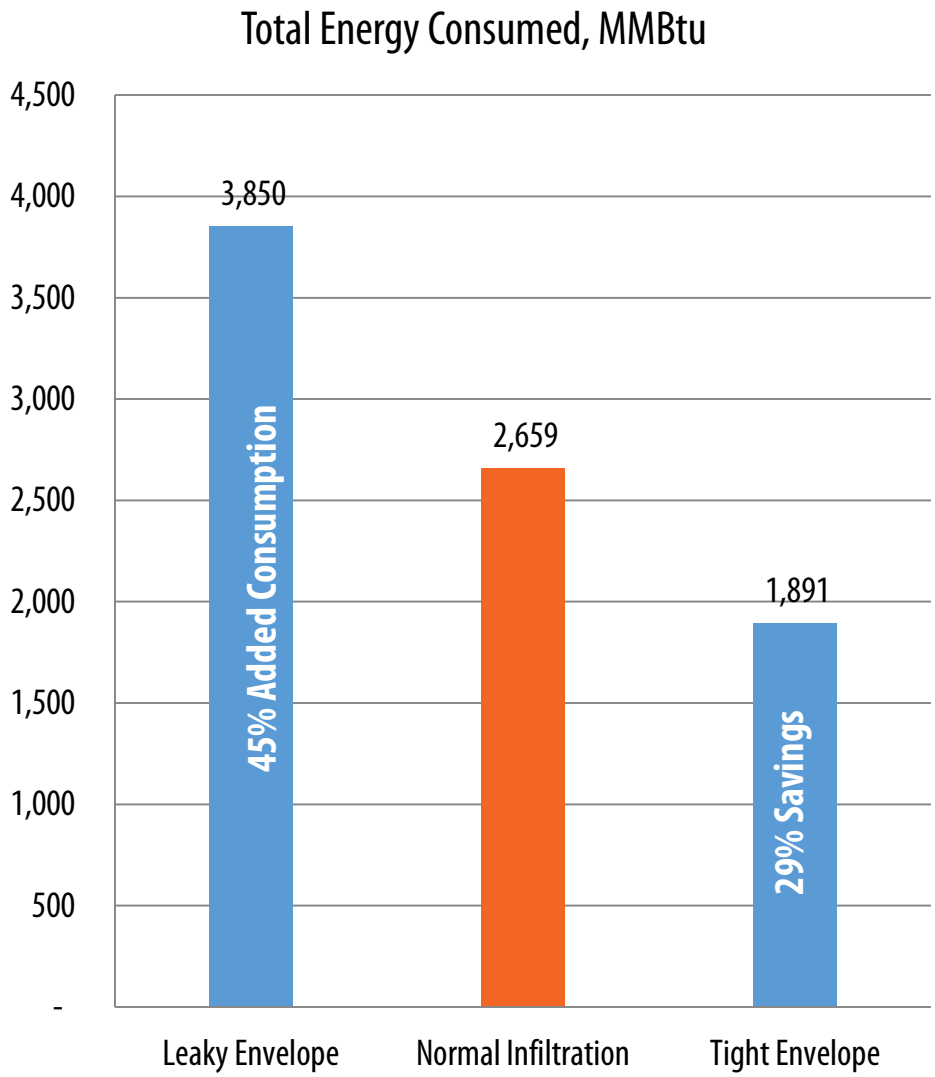

ASHRAE Climate Zones

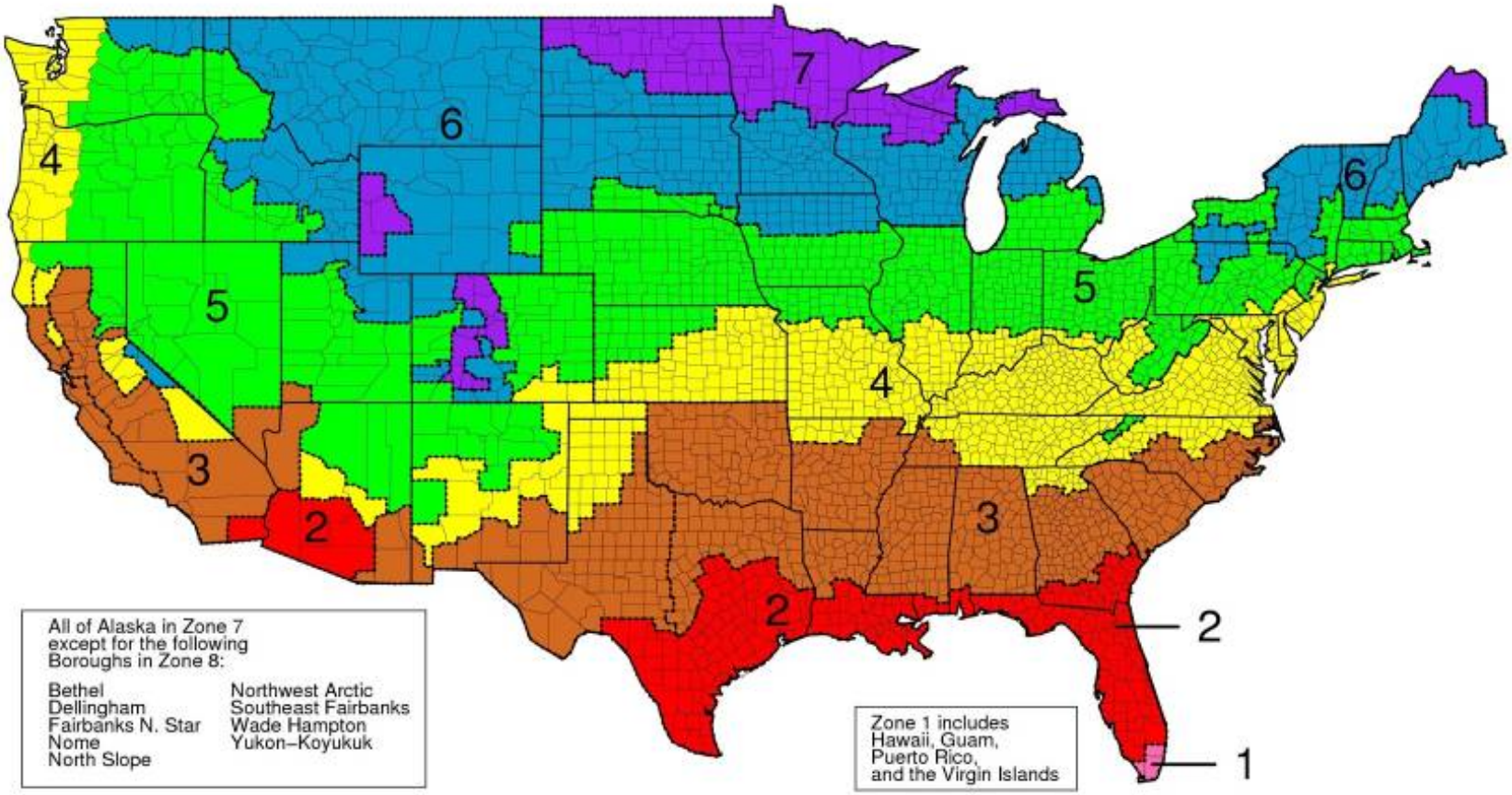

We are Zone 5

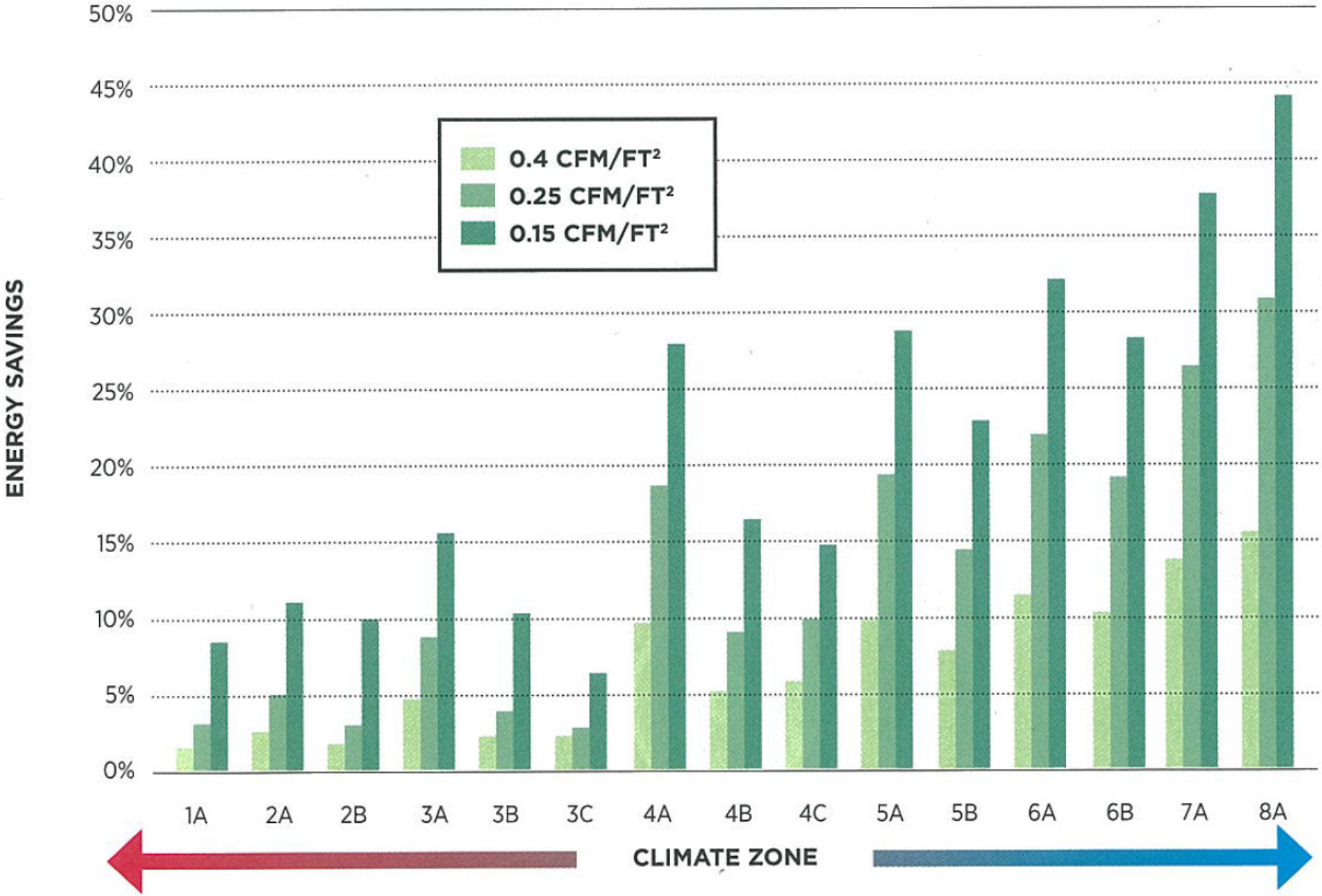

Courtesy of Buildings Magazine 8/14 and BCRA

RCIALWRA
when installed according to DuPont™ Tyvek® best practices. See installation instructions.
000 • BOCA ES #98-46 • SBCCI PST&ES #95105D • NER-642
Sheathing Membrane/ Membranes de revetement permeables a la vapeur d'eau
4TYVEK
WWW.TYVEK.COM
The miracles of science
Tyvek

33

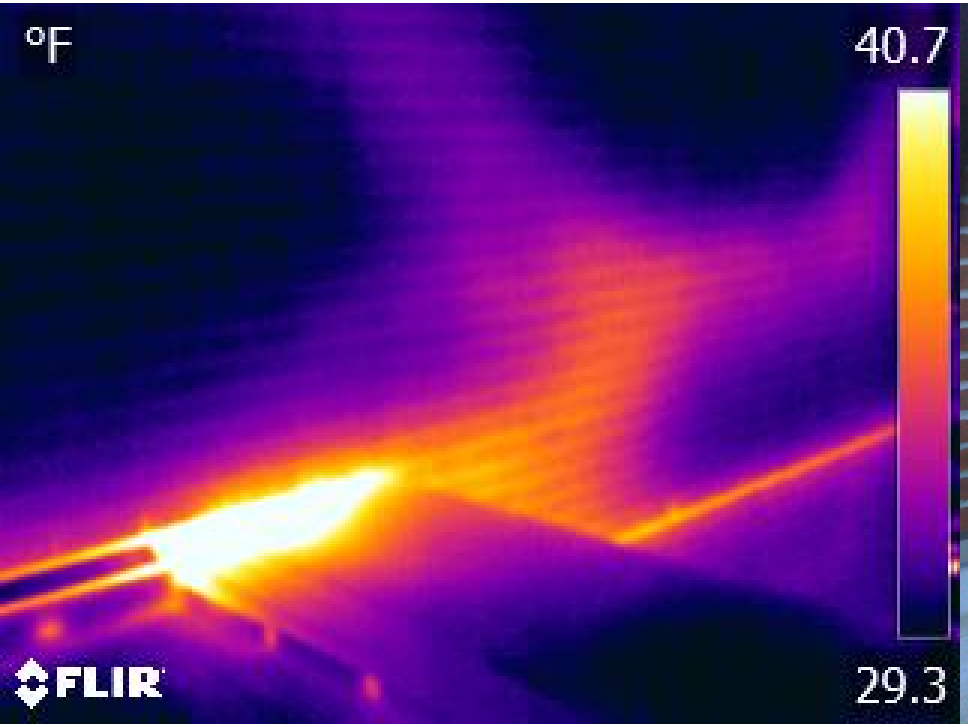
°F
40.7
29.3
FLIR

°F
43.9
30.8
FLIR

46.1
23.8
FLIR

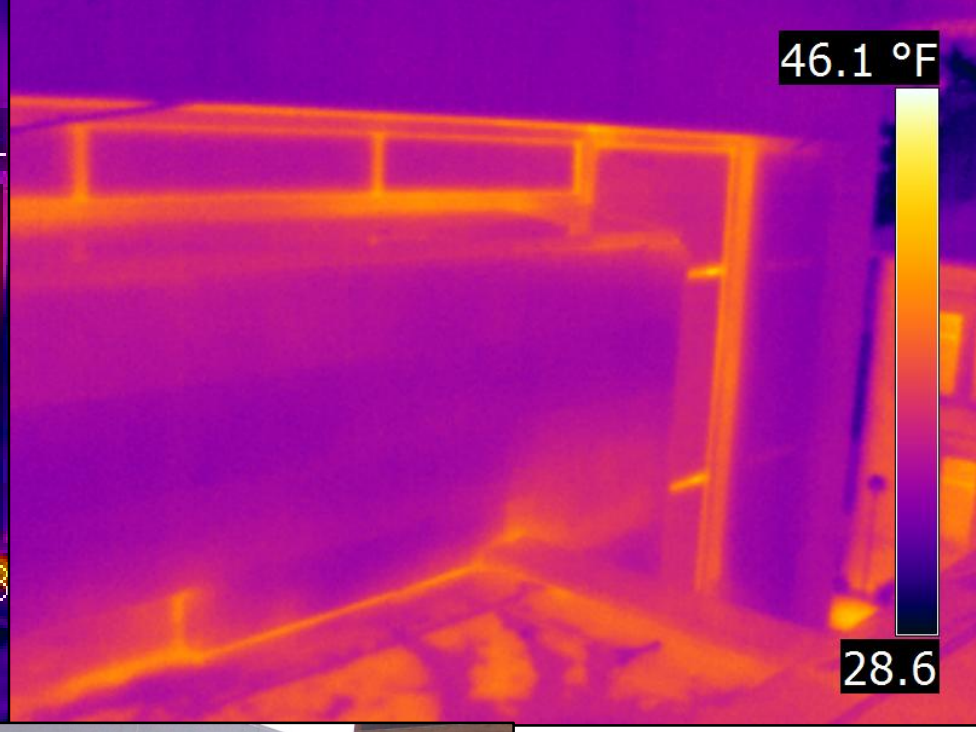
46.1 °F
28.6

Thermal Discontinuity

Effective R-Value

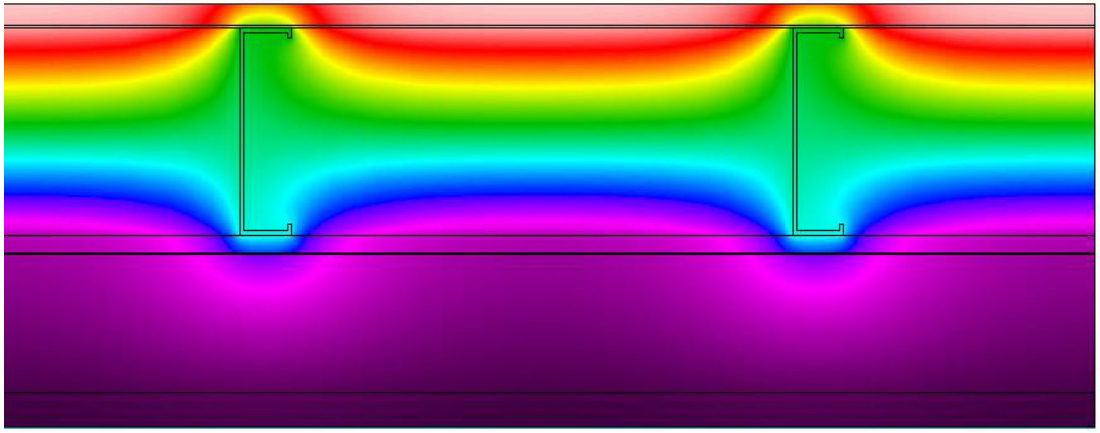

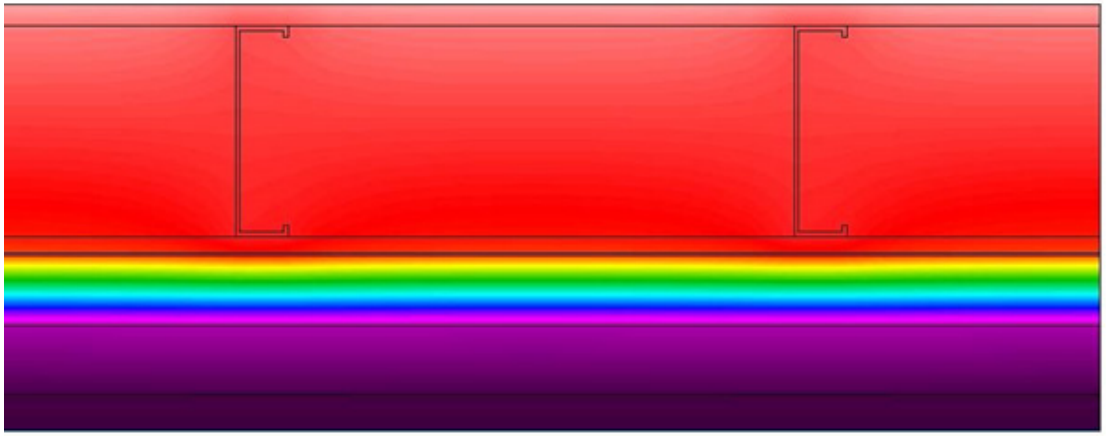

Effective R-Value

19

ANSI/ASHRAE STANDARD 90.1-1999

TABLE A-8 (Sections A3.1.2 and A4.1.3)
Effective R-Values for Insulation/Framing Layers Added to Above-Grade Mass Walls and Below-Grade Walls

Depth (in.)	Framing Type	Rated R-Value of Insulation																									
		0	1	2	3	4	5	6	7	8	9	10	11	12	13	14	15	16	17	18	19	20	21	22	23	24	25
Effective R-value if continuous insulation uninterrupted by framing (includes gypsum board)																											
	None	0.5	1.5	2.5	3.5	4.5	5.5	6.5	7.5	8.5	9.5	10.5	11.5	12.5	13.5	14.5	15.5	16.5	17.5	18.5	19.5	20.5	21.5	22.5	23.5	24.5	25.5
Effective R-value if insulation is installed in cavity between framing (includes gypsum board)																											
0.5	Wood	1.3	1.3	1.9	2.4	2.7	na	na	na	na	na	na	na	na	na	na	na	na	na	na	na	na	na	na	na	na	na
	Metal	0.9	0.9	1.1	1.1	1.2	na	na	na	na	na	na	na	na	na	na	na	na	na	na	na	na	na	na	na	na	na
0.75	Wood	1.4	1.4	2.1	2.7	3.1	3.5	3.8	na	na	na	na	na	na	na	na	na	na	na	na	na	na	na	na	na	na	na
	Metal	1.0	1.0	1.3	1.4	1.5	1.5	1.6	na	na	na	na	na	na	na	na	na	na	na	na	na	na	na	na	na	na	na
1.0	Wood	1.3	1.5	2.2	2.9	3.4	3.9	4.3	4.6	4.9	na	na	na	na	na	na	na	na	na	na	na	na	na	na	na	na	na
	Metal	1.0	1.1	1.4	1.6	1.7	1.8	1.8	1.9	1.9	na	na	na	na	na	na	na	na	na	na	na	na	na	na	na	na	na
1.5	Wood	1.3	1.5	2.4	3.1	3.8	4.4	4.9	5.4	5.8	6.2	6.5	6.8	7.1	na	na	na	na	na	na	na	na	na	na	na	na	na
	Metal	1.1	1.2	1.6	1.9	2.1	2.2	2.3	2.4	2.5	2.5	2.6	2.6	2.7	na	na	na	na	na	na	na	na	na	na	na	na	na
2.0	Wood	1.4	1.5	2.5	3.3	4.0	4.7	5.3	5.9	6.4	6.9	7.3	7.7	8.1	8.4	8.7	9.0	9.3	na	na	na	na	na	na	na	na	na
	Metal	1.1	1.2	1.7	2.1	2.3	2.5	2.7	2.8	2.9	3.0	3.1	3.2	3.2	3.3	3.3	3.4	3.4	na	na	na	na	na	na	na	na	na
2.5	Wood	1.4	1.5	[illegible]	[illegible]	[illegible]	[illegible]	[illegible]	[illegible]	[illegible]	[illegible]	[illegible]	[illegible]	[illegible]	[illegible]	[illegible]	[illegible]	10.3	10.6	10.9	11.2	11.5	na	na	na	na	na
	Metal	1.2	1.3	[illegible]	[illegible]	[illegible]	[illegible]	[illegible]	[illegible]	[illegible]	[illegible]	[illegible]	[illegible]	[illegible]	[illegible]	[illegible]	[illegible]	4.0	4.0	4.1	4.1	4.1	na	na	na	na	na
3.0	Wood	1.4	1.5	[illegible]	[illegible]	[illegible]	[illegible]	[illegible]	[illegible]	[illegible]	[illegible]	[illegible]	[illegible]	[illegible]	[illegible]	[illegible]	[illegible]	11.1	11.5	11.9	12.2	12.5	12.9	na	na	na	na
	Metal	1.2	1.3	[illegible]	[illegible]	[illegible]	[illegible]	[illegible]	[illegible]	[illegible]	[illegible]	[illegible]	[illegible]	[illegible]	[illegible]	[illegible]	[illegible]	4.5	4.6	4.6	4.7	4.7	4.8	na	na	na	na
3.5	Wood	1.4	1.5	[illegible]	[illegible]	[illegible]	[illegible]	[illegible]	[illegible]	[illegible]	[illegible]	[illegible]	[illegible]	[illegible]	[illegible]	[illegible]	[illegible]	11.8	12.2	12.6	13.0	13.4	13.8	14.1	14.5	14.8	15.1
	Metal	1.2	1.3	[illegible]	[illegible]	[illegible]	[illegible]	[illegible]	[illegible]	[illegible]	[illegible]	[illegible]	[illegible]	[illegible]	[illegible]	[illegible]	[illegible]	5.0	5.1	5.1	5.2	5.2	5.3	5.4	5.4	5.4	5.5
4.0	Wood	1.4	1.6	[illegible]	[illegible]	[illegible]	[illegible]	[illegible]	[illegible]	[illegible]	[illegible]	[illegible]	[illegible]	[illegible]	[illegible]	[illegible]	[illegible]	12.4	12.8	13.3	13.7	14.2	14.6	14.9	15.3	15.7	16.0
	Metal	1.2	1.3	[illegible]	[illegible]	[illegible]	[illegible]	[illegible]	[illegible]	[illegible]	[illegible]	[illegible]	[illegible]	[illegible]	[illegible]	[illegible]	[illegible]	5.4	5.5	5.6	5.7	5.8	5.8	5.9	5.9	6.0	6.0
4.5	Wood	1.4	1.6	2.6	3.6	4.5	5.4	6.2	7.1	7.8	8.5	9.2	9.9	10.5	11.2	11.7	12.3	12.8	13.3	13.8	14.3	14.8	15.2	15.7	16.1	16.5	16.9
	Metal	1.2	1.3	2.1	2.6	3.1	3.5	3.9	4.2	4.5	4.7	4.9	5.1	5.3	5.4	5.6	5.7	5.8	5.9	6.0	6.1	6.2	6.3	6.4	6.4	6.5	6.6
5.0	Wood	1.4	1.6	2.6	3.6	4.6	5.5	6.3	7.2	8.0	8.7	9.4	10.1	10.8	11.5	12.1	12.7	13.2	13.8	14.3	14.8	15.3	15.8	16.3	16.7	17.2	17.6
	Metal	1.2	1.4	2.1	2.7	3.2	3.7	4.1	4.4	4.7	5.0	5.2	5.4	5.6	5.8	5.9	6.1	6.2	6.3	6.5	6.6	6.7	6.8	6.8	6.9	7.0	7.1
5.5	Wood	1.4	1.6	2.6	3.6	4.6	5.5	6.4	7.3	8.1	8.9	9.6	10.3	11.0	11.7	12.4	13.0	13.6	14.2	14.7	15.3	15.8	16.2	16.8	17.3	17.8	18.2
	Metal	1.3	1.4	2.1	2.8	3.3	3.8	4.2	4.6	4.9	5.2	5.4	5.7	5.9	6.1	6.3	6.4	6.6	6.7	6.8	7.0	7.1	7.2	7.3	7.4	7.5	7.6

5.5 Wood
Metal

15.3
7.0

Wall Insulation

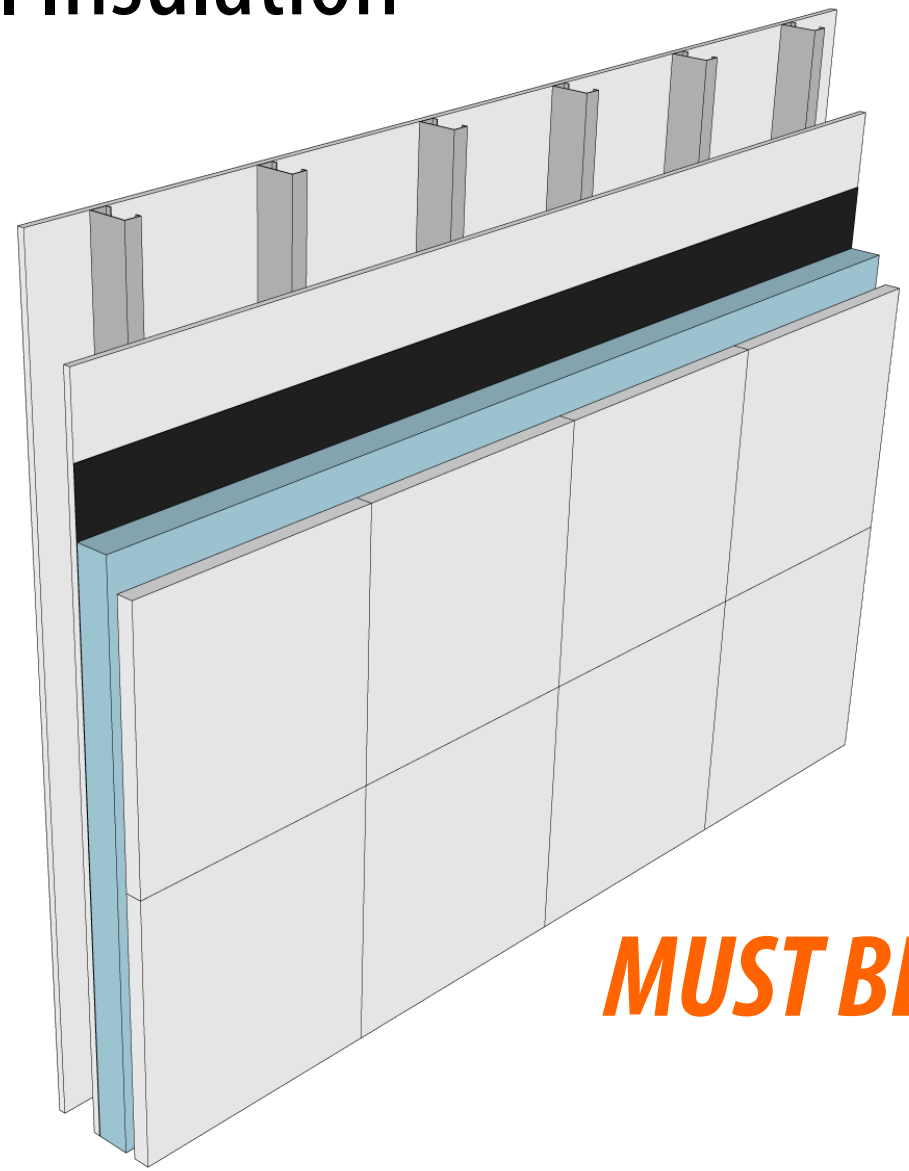

MUST BE CONTINUOUS!!!

The Insulation, Not the Z-girts

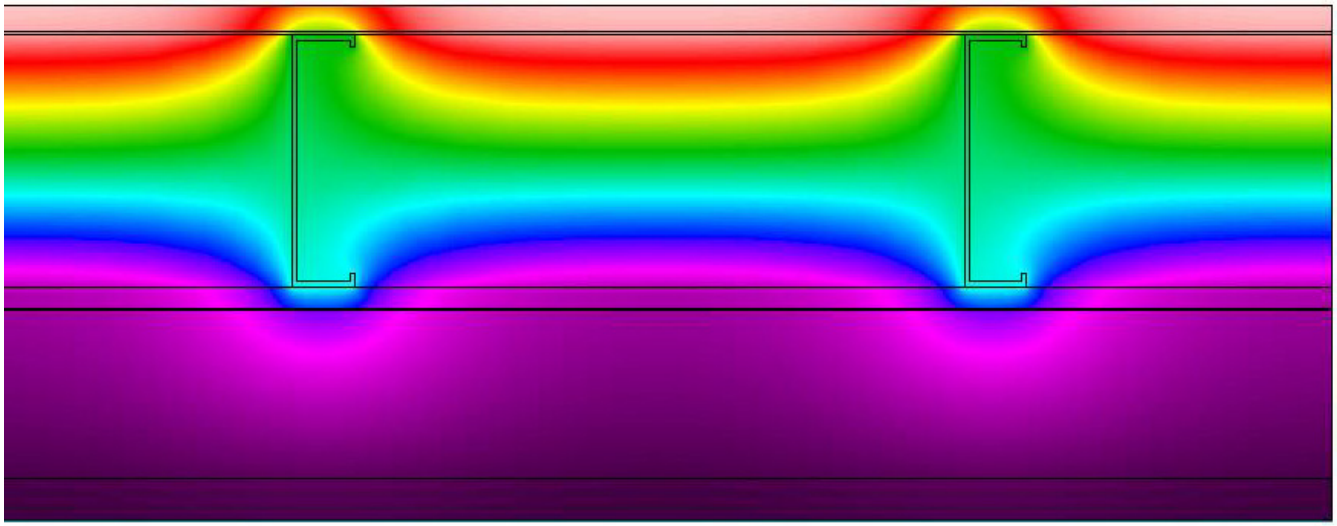

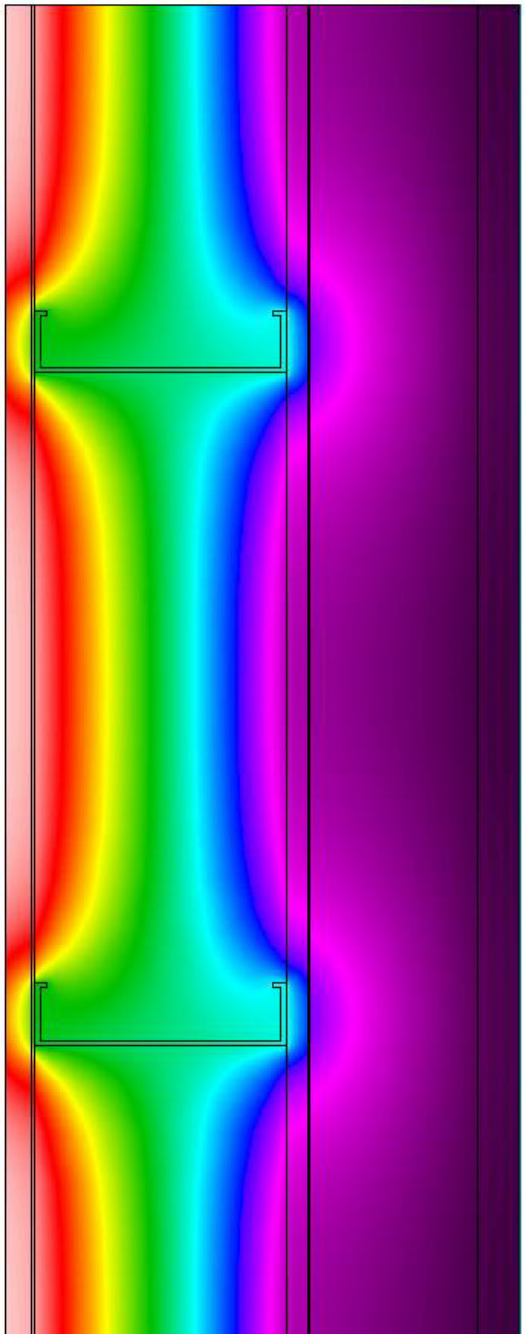

2.5" Extruded Polystyrene ***(R12.5)***
Assembly U=0.1169
Equivalent ***R=8.55***

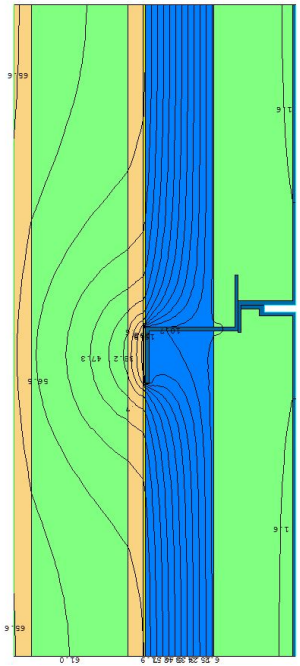

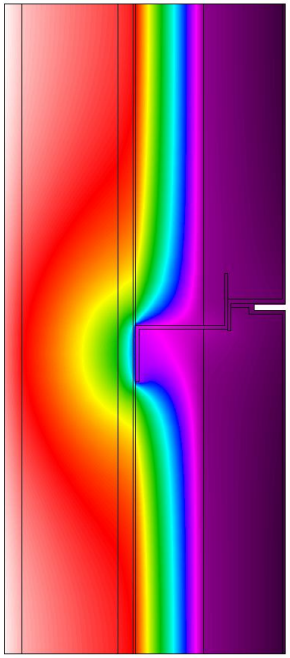

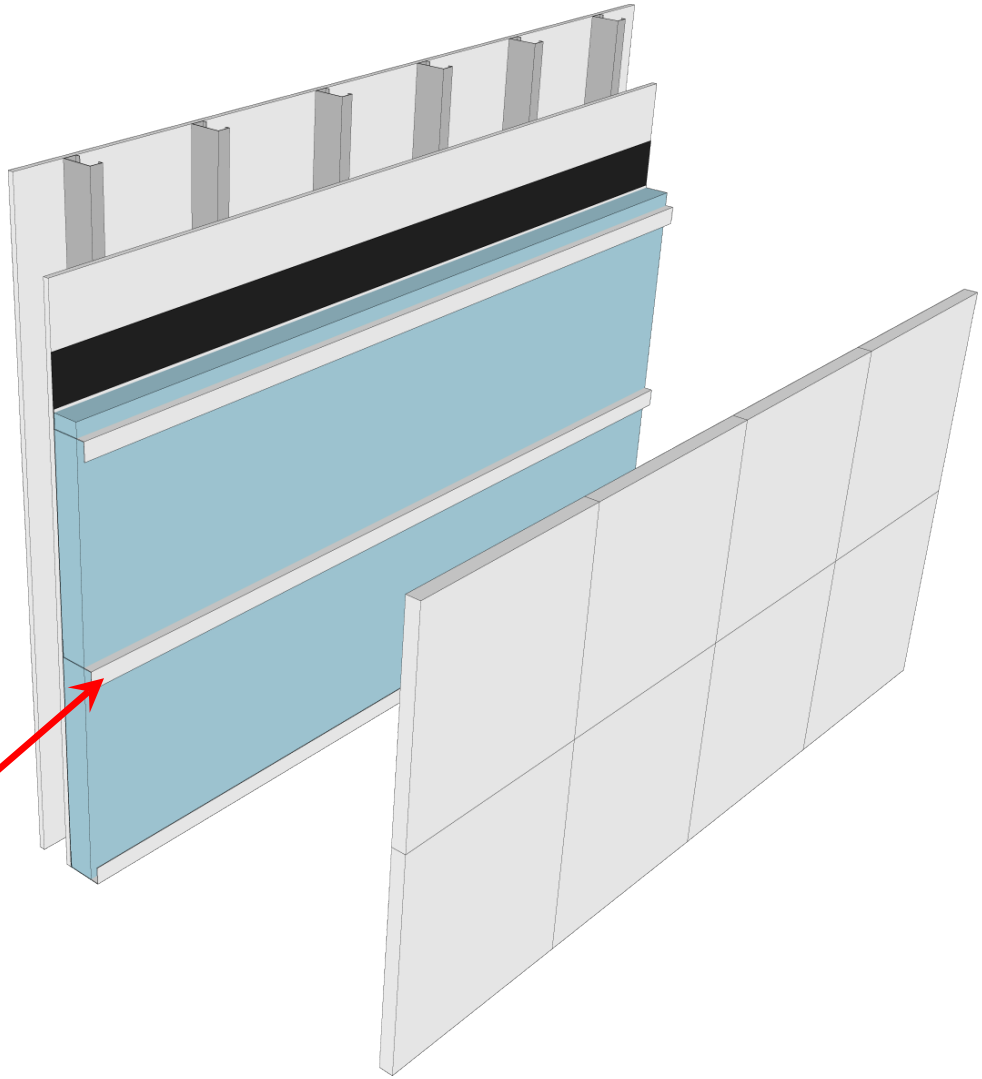

No Longer Continuous
No Longer U=0.064

2.5" Extruded Polystyrene ***(R12.5)***

Assembly U = 0.064

Equivalent R = R15.6

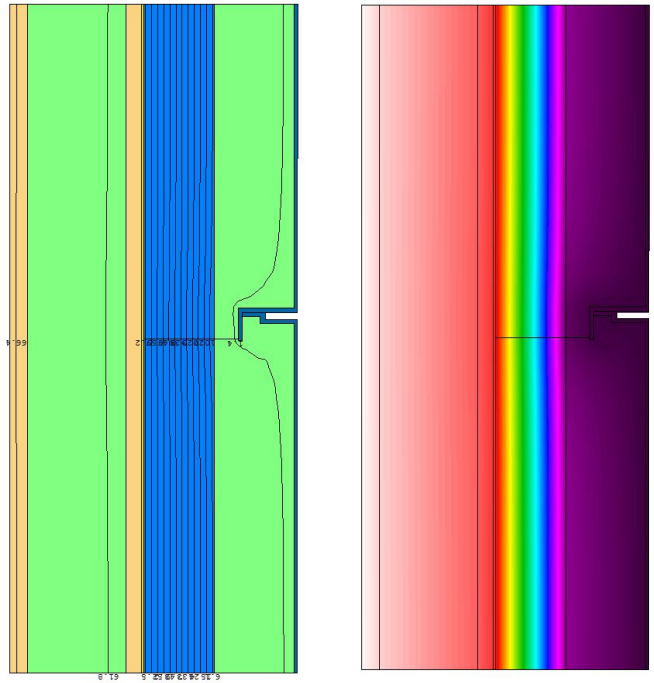

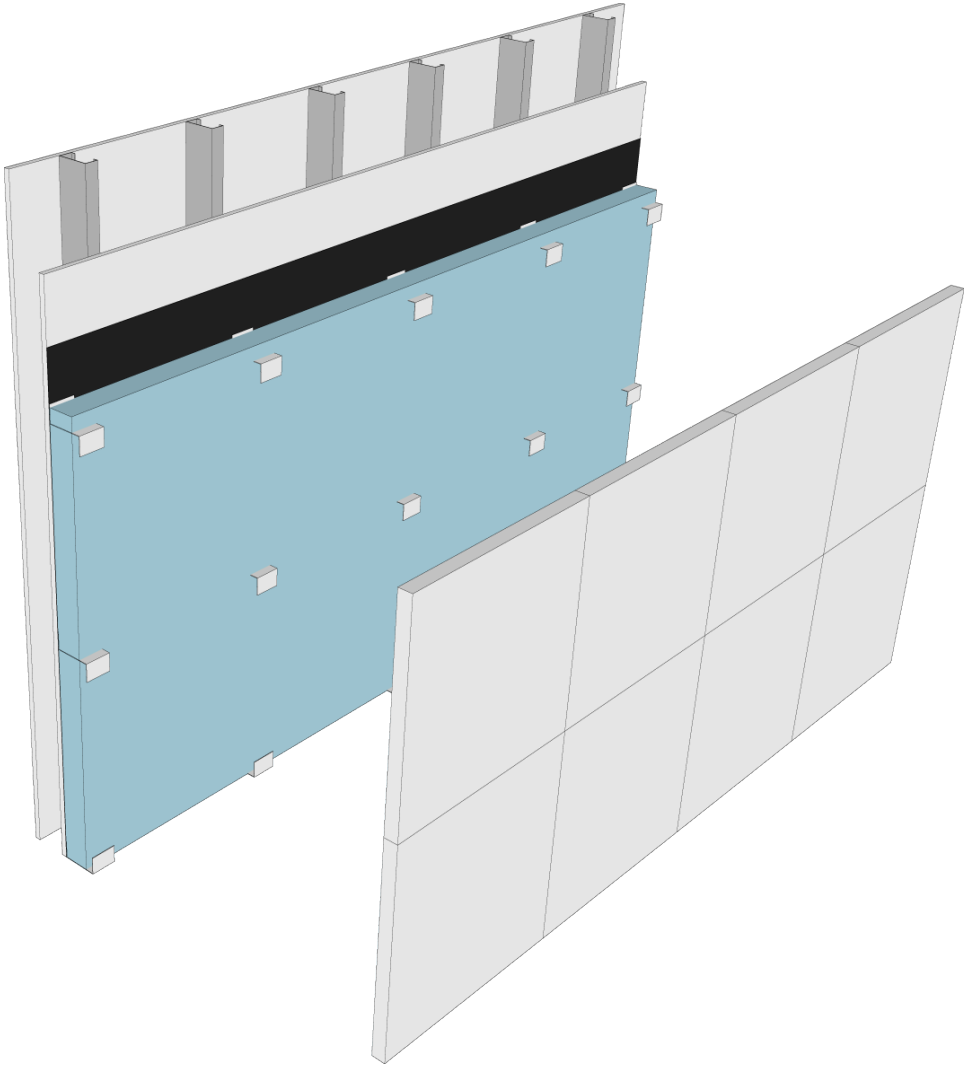

Masonry Relief Angles

3” XPS Insulation = R15
“Clear Wall” ≈ R18.5
Total Effective ≈ R10

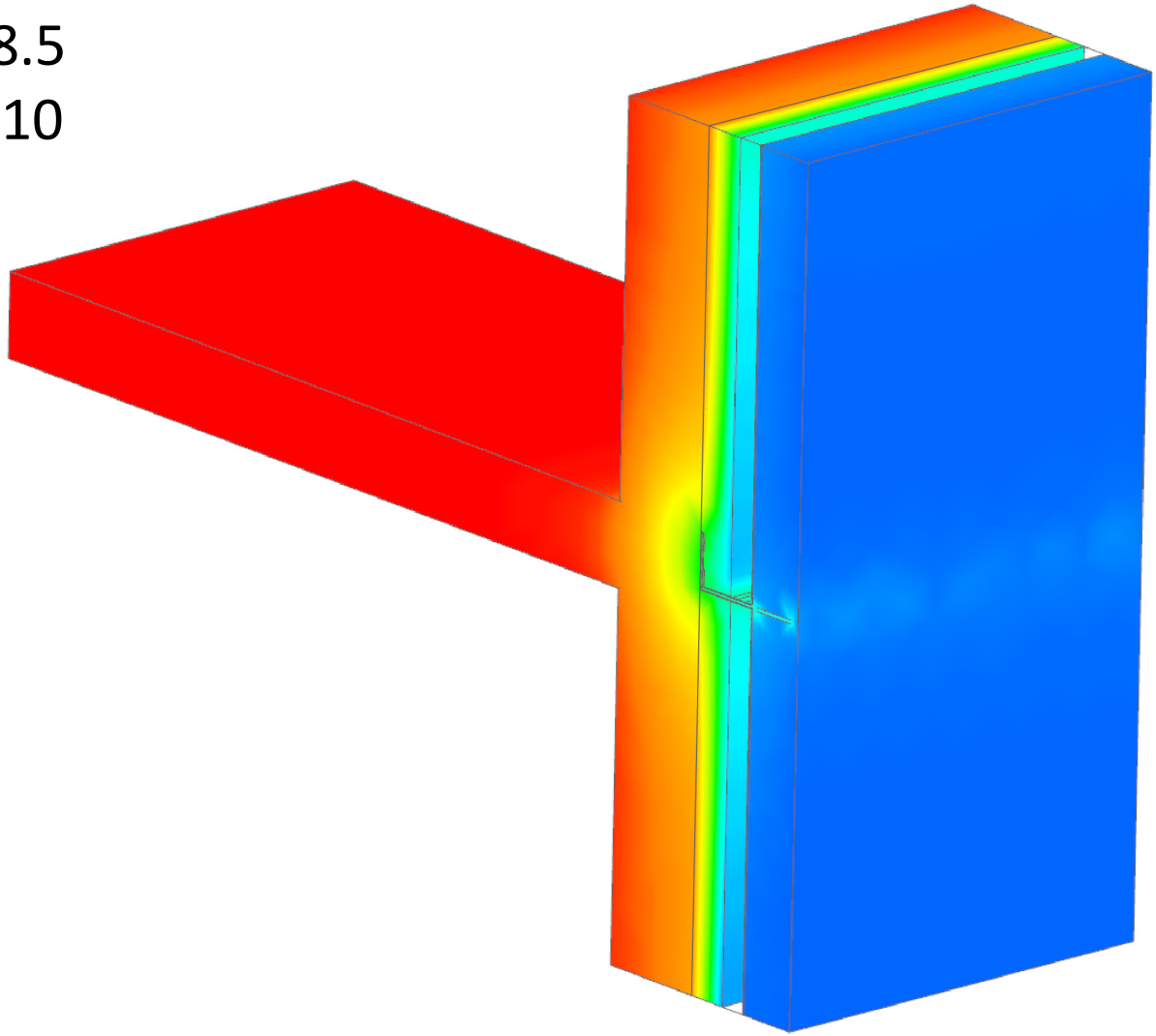

Masonry Relief Angles

2” XPS Insulation = R10
“Clear Wall” ≈ R13.5
Total Effective ≈ R10

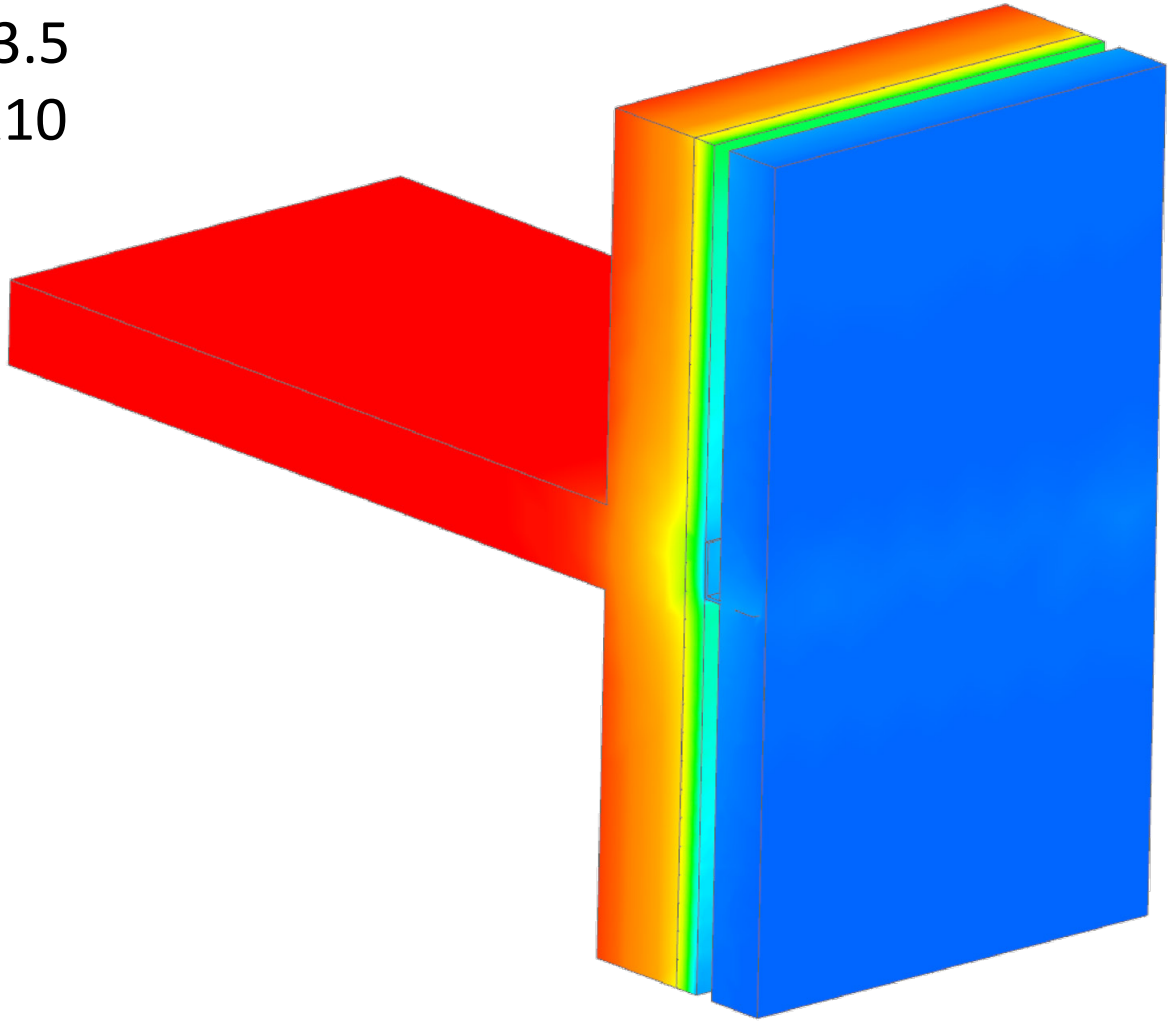

HALFEN BRICKWORK SUPPORT
TECHNICAL PRODUCT INFORMATION
HALFEN BRICKWORK SUPPORT
FM - 10.1 - US
FAÇADE

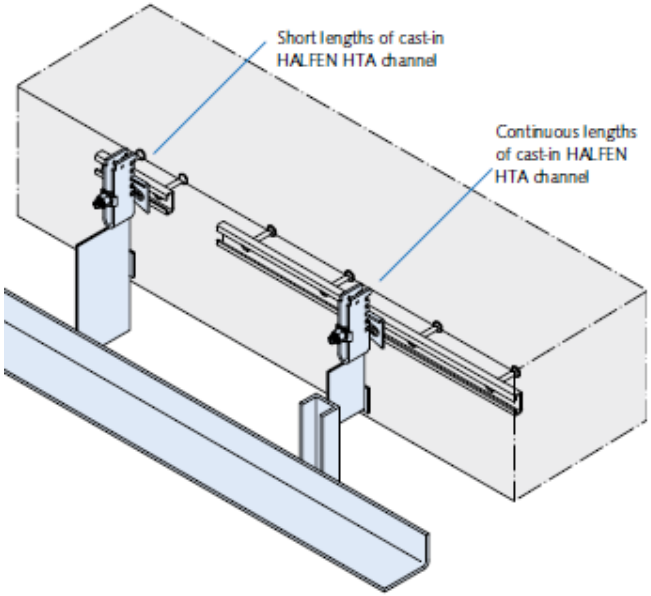
Short lengths of cast-in HALFEN HTA channel
Continuous lengths of cast-in HALFEN HTA channel

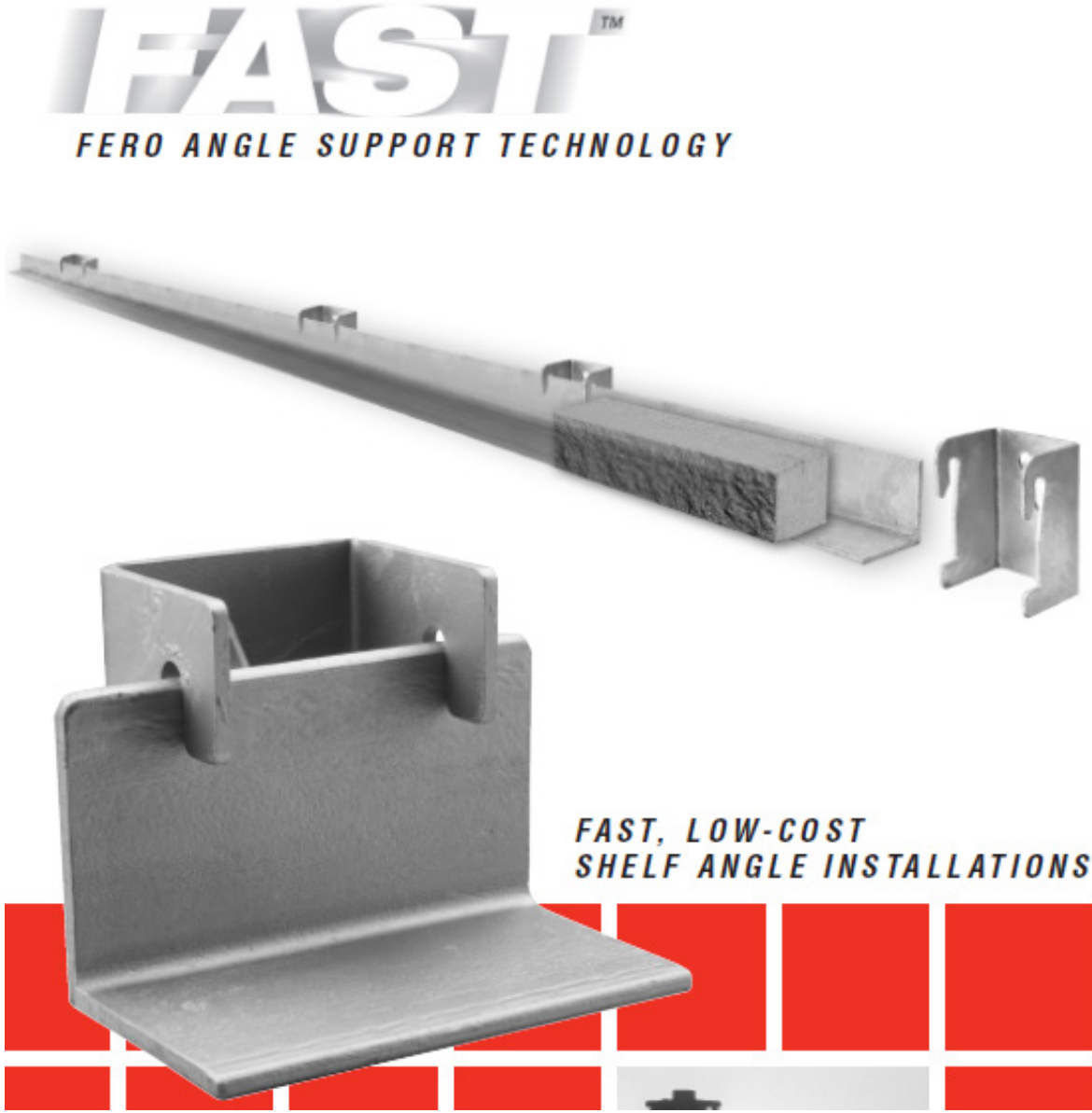
FAST™
FERO ANGLE SUPPORT TECHNOLOGY
FAST, LOW-COST
SHELF ANGLE INSTALLATIONS

Curtain Wall Spandrels

Center of Spandrel = R16

Total Product = R8

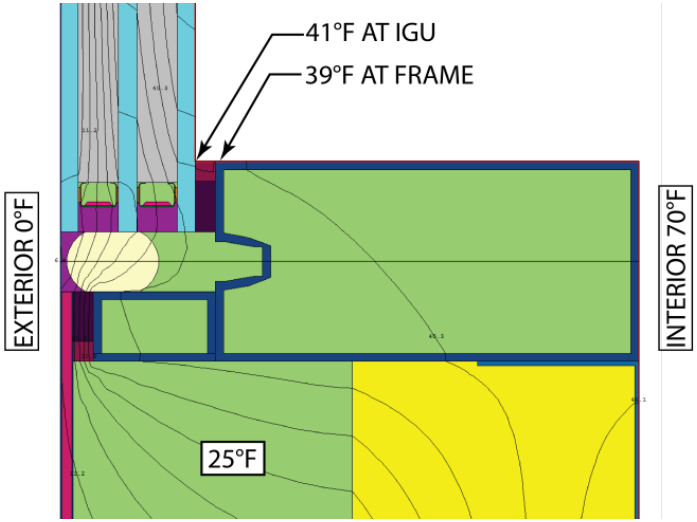

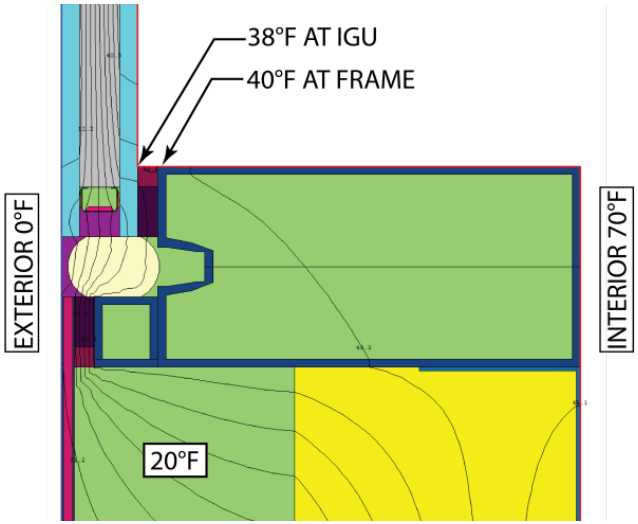

Curtain Wall Spandrels

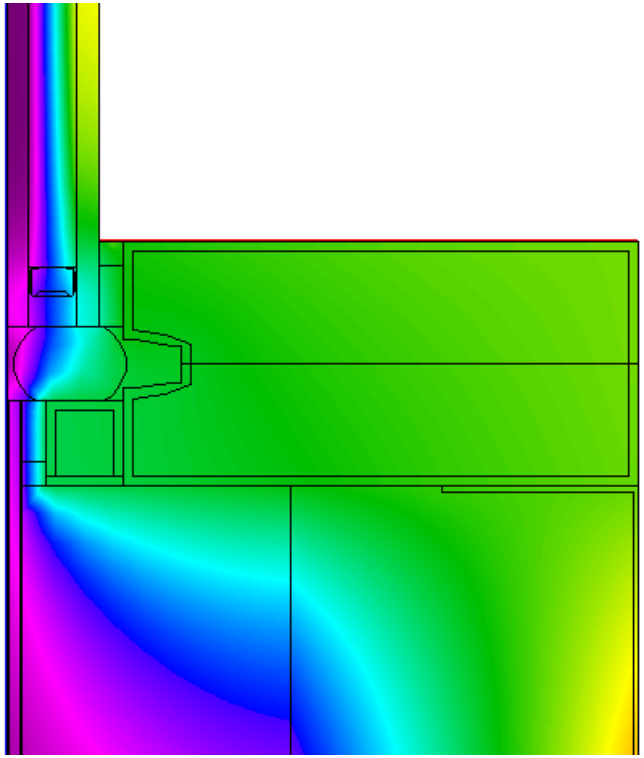

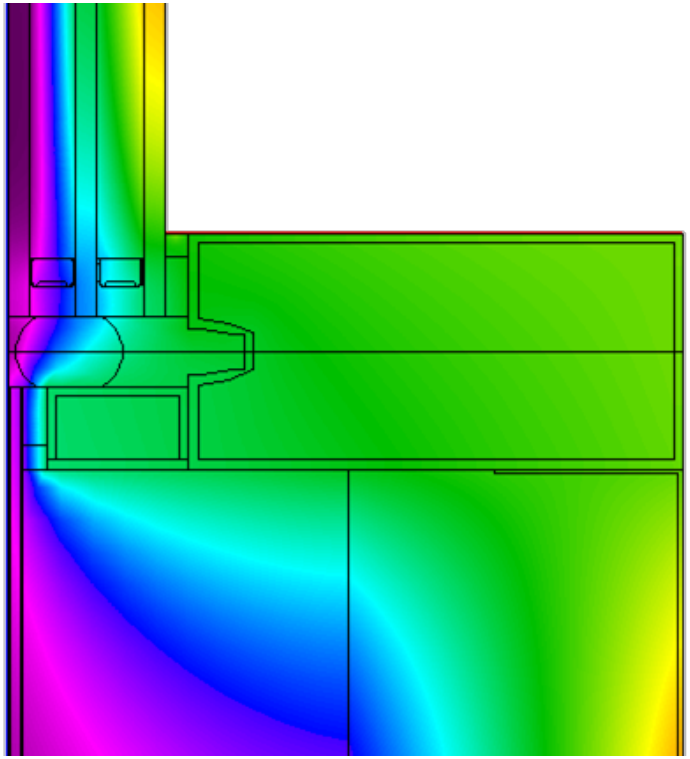

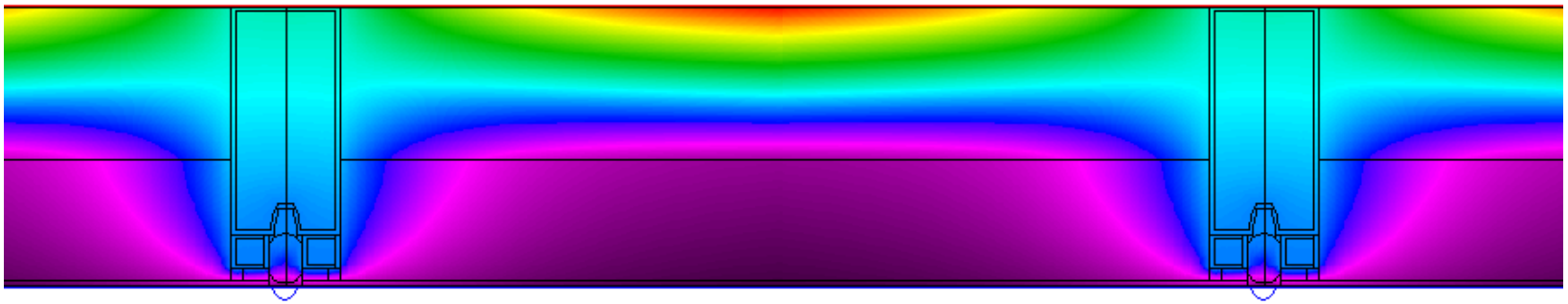

Curtain Wall Spandrels

95% = 10′x7′ mullion pattern

87% = 2′x7′ mullion pattern

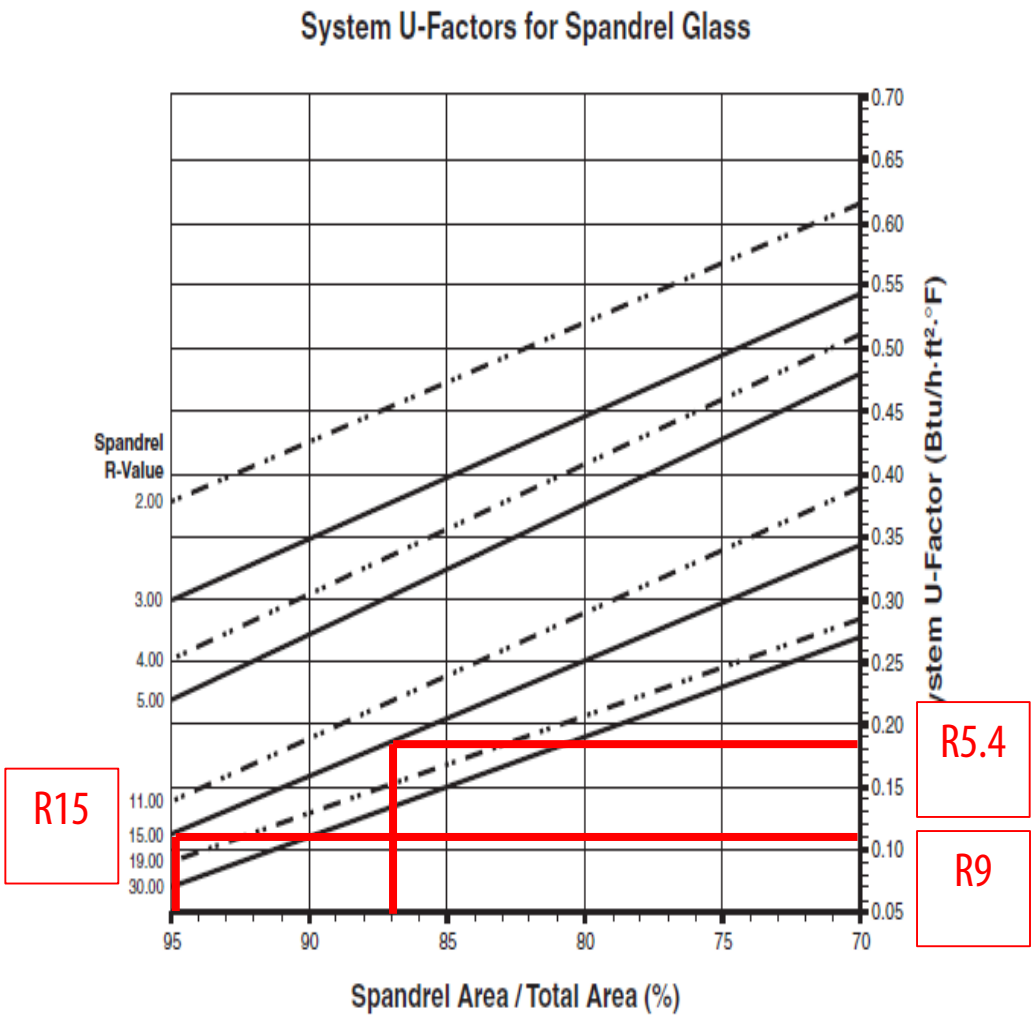

Courtesy of Kawneer

Curtain Wall Spandrels

Center of Spandrel = R30

Total Product = R17

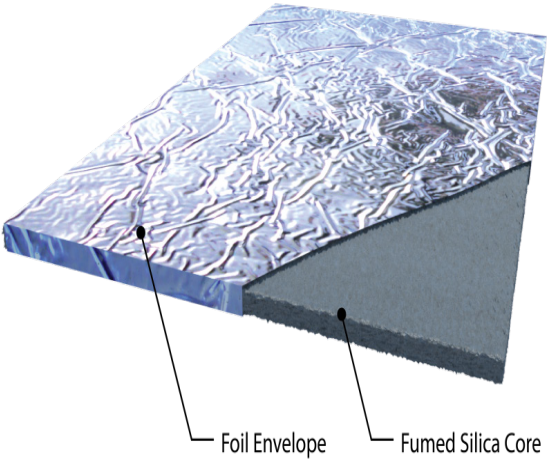

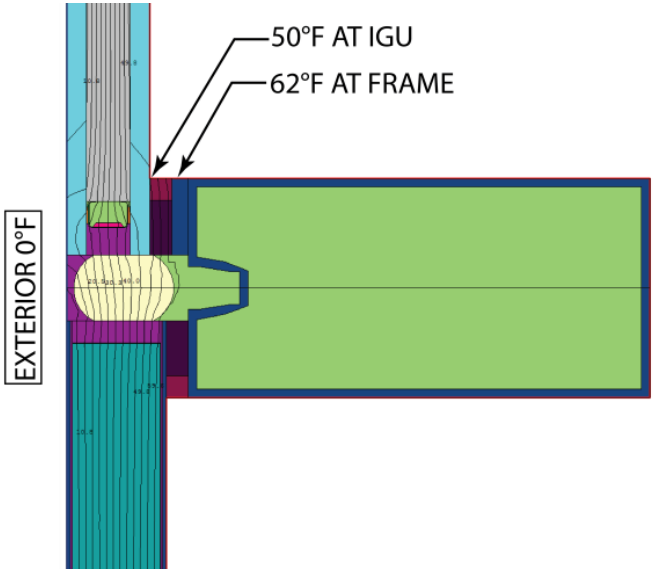

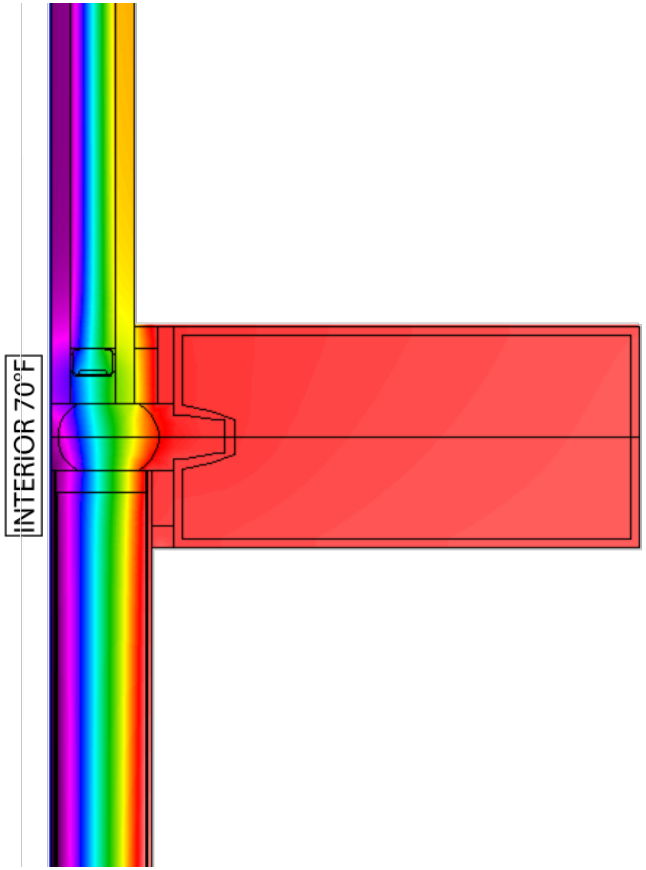

Curtain Wall Spandrels

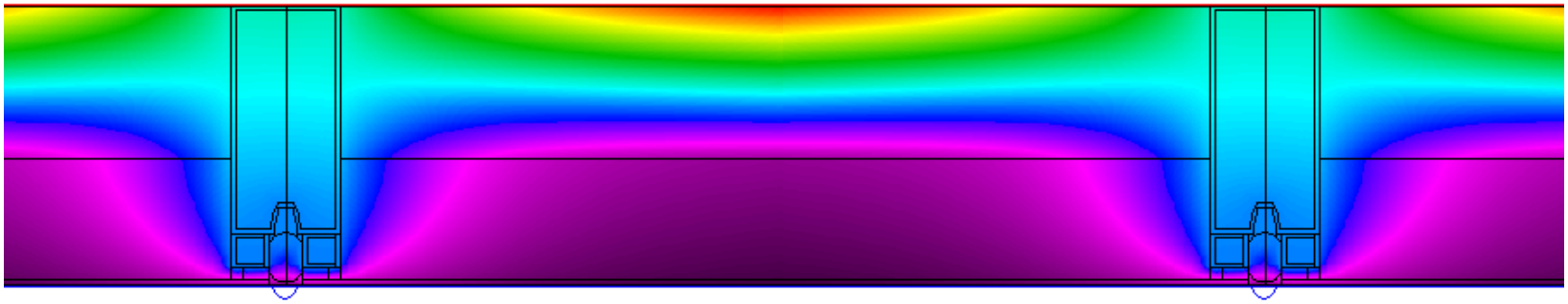

Mechanically Attached Roofs

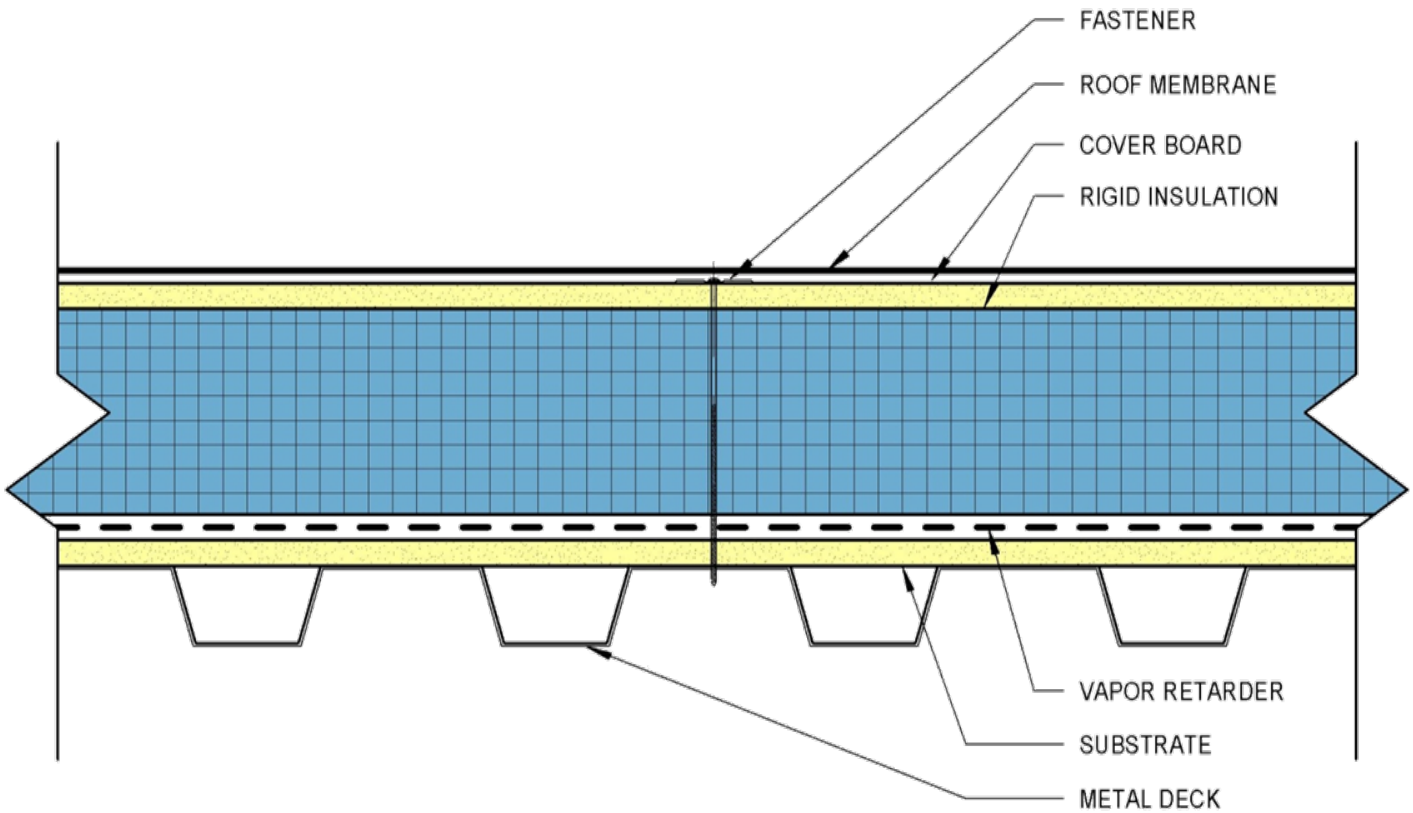

Vapor Discontinuity

For Vapor Control You Must First Have Air Control

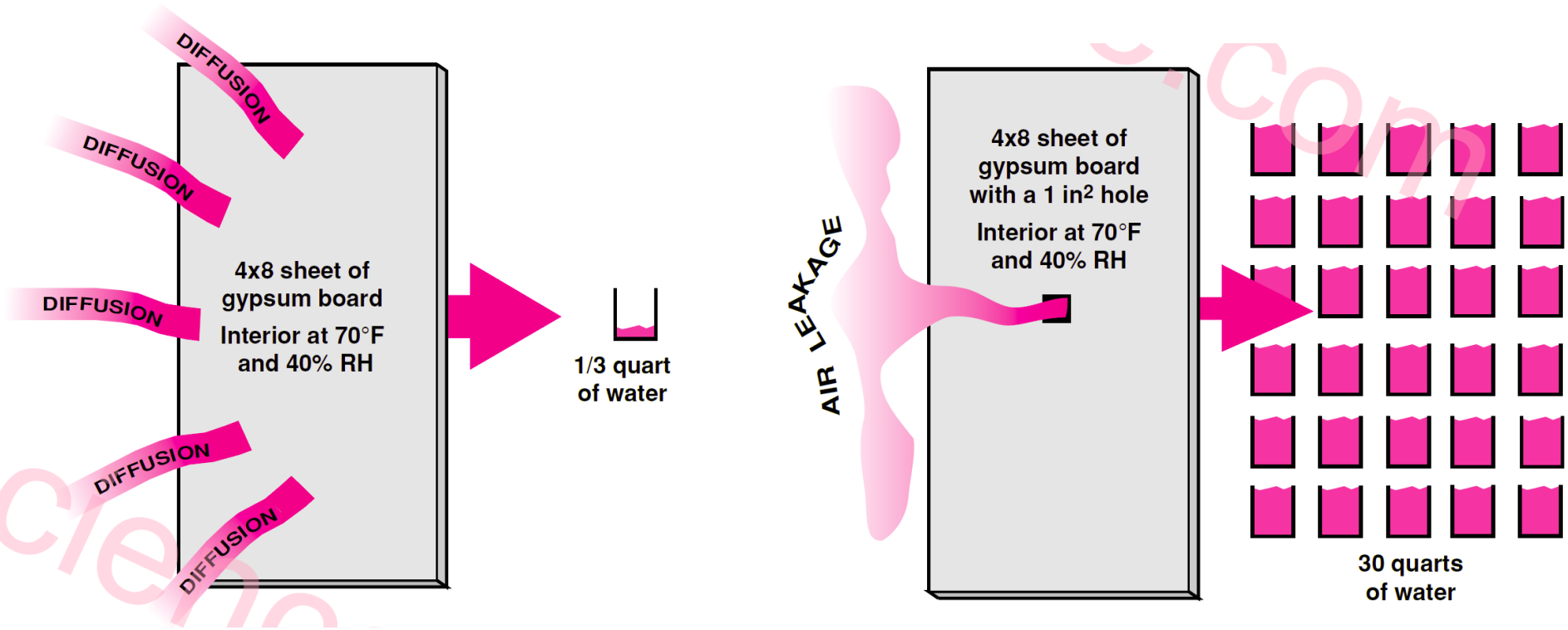

Insulations, Sheathings, and Vapor Retarders: Building Science Corporation, Research Report - 0412

Avoid Discontinuity

Avoid Discontinuity

- Roofs
- Walls
- Fenestration
- Below Grade Walls
- Soffits
- Transitions

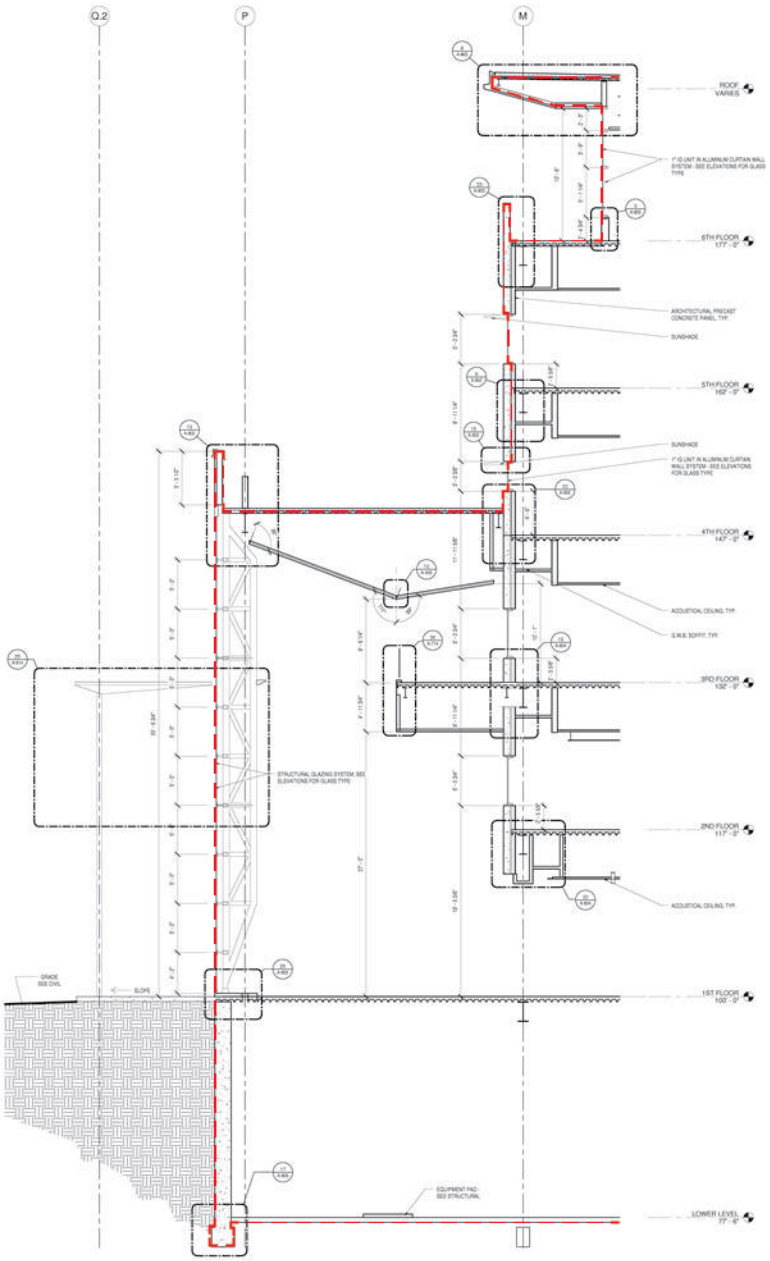

Trace the Layers

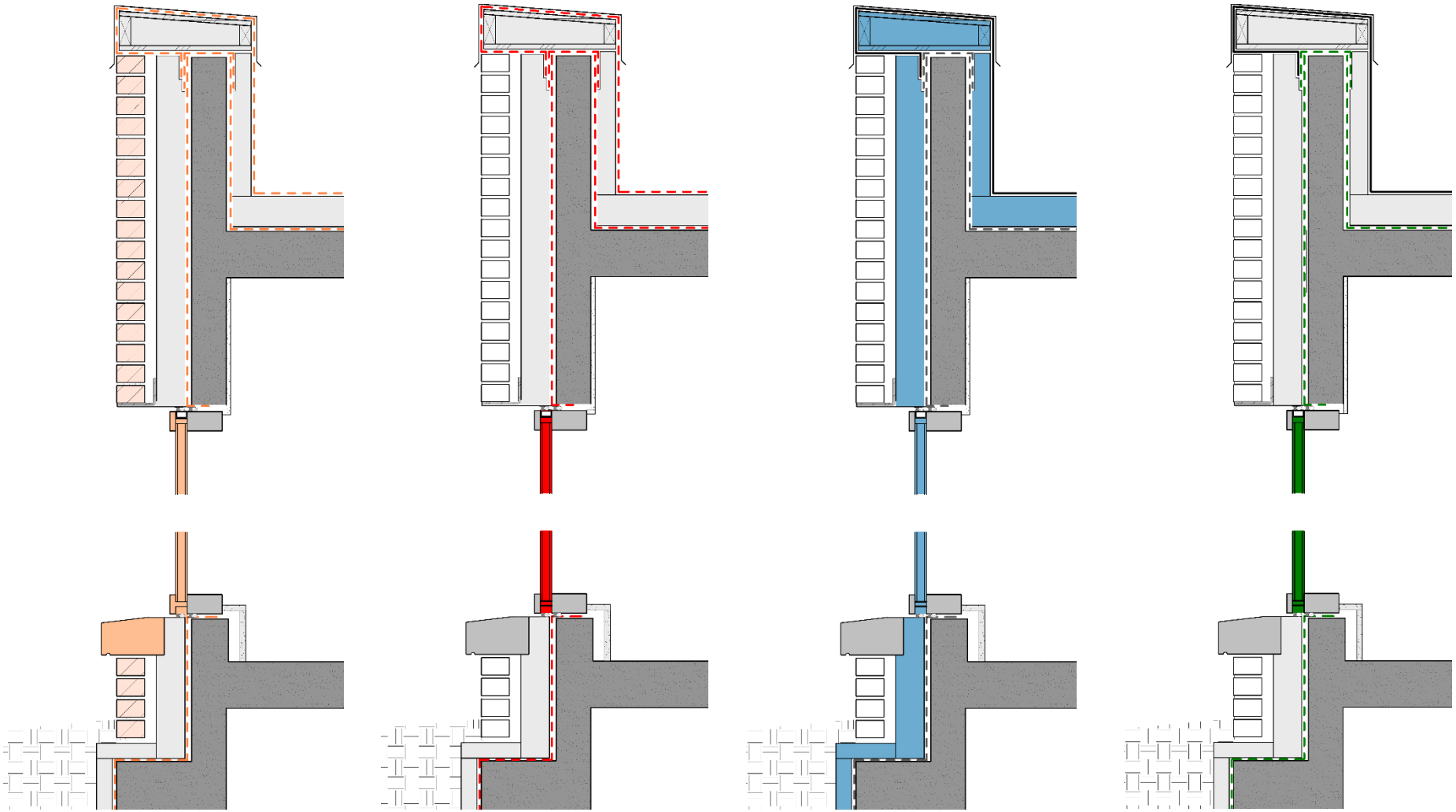

Water Air Thermal Vapor

Poor Continuity

- THERMAL
- VAPOR

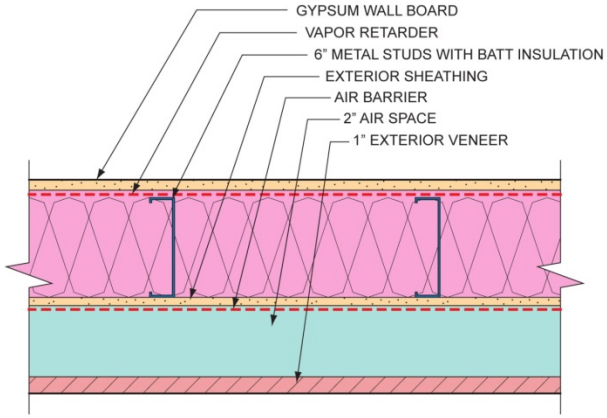

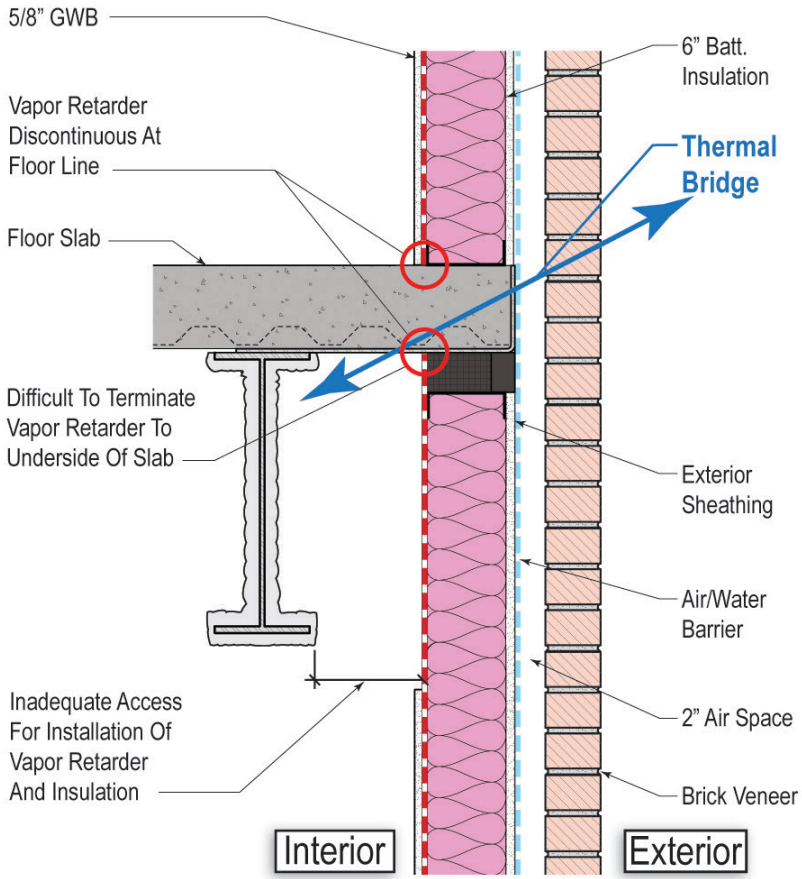

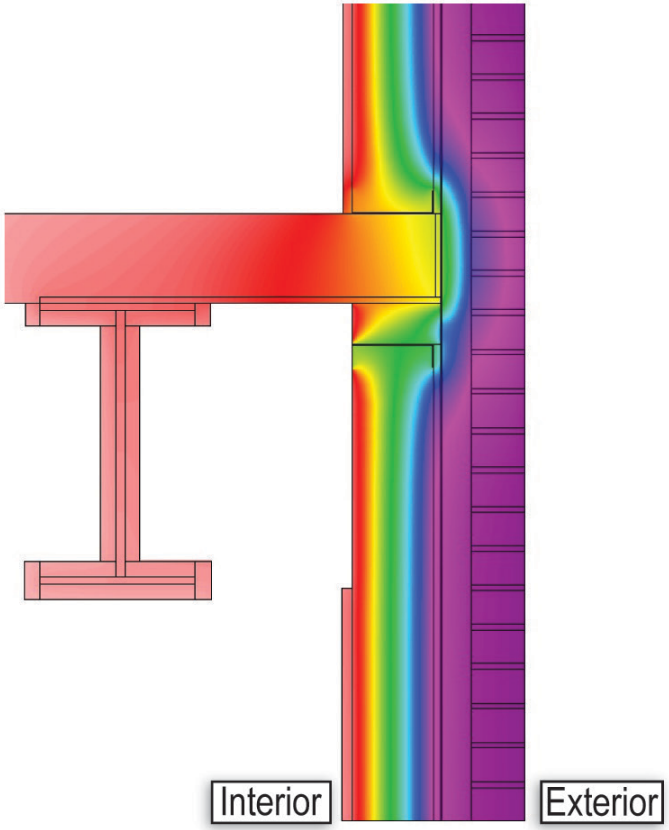

W18x30

Better Continuity

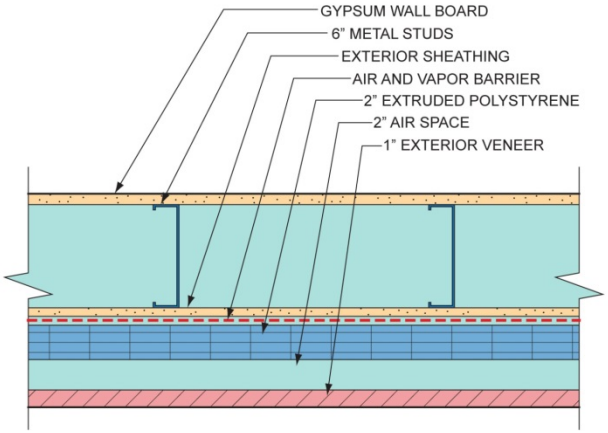

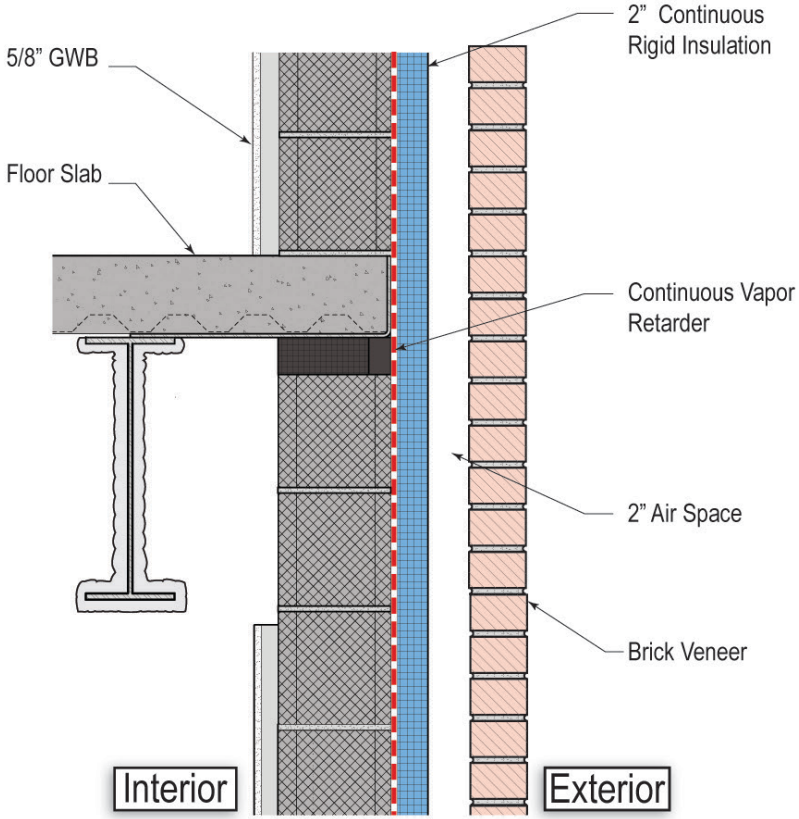

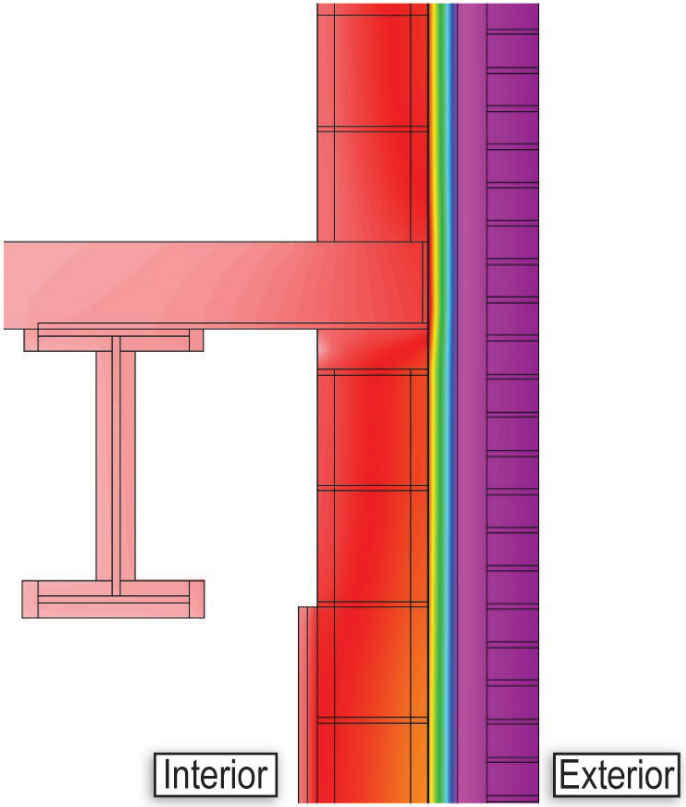

Poor Continuity

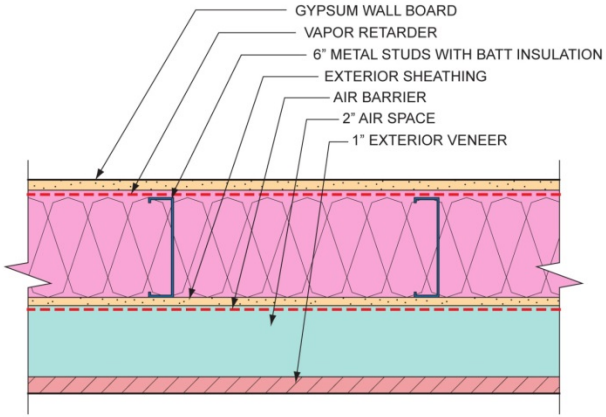

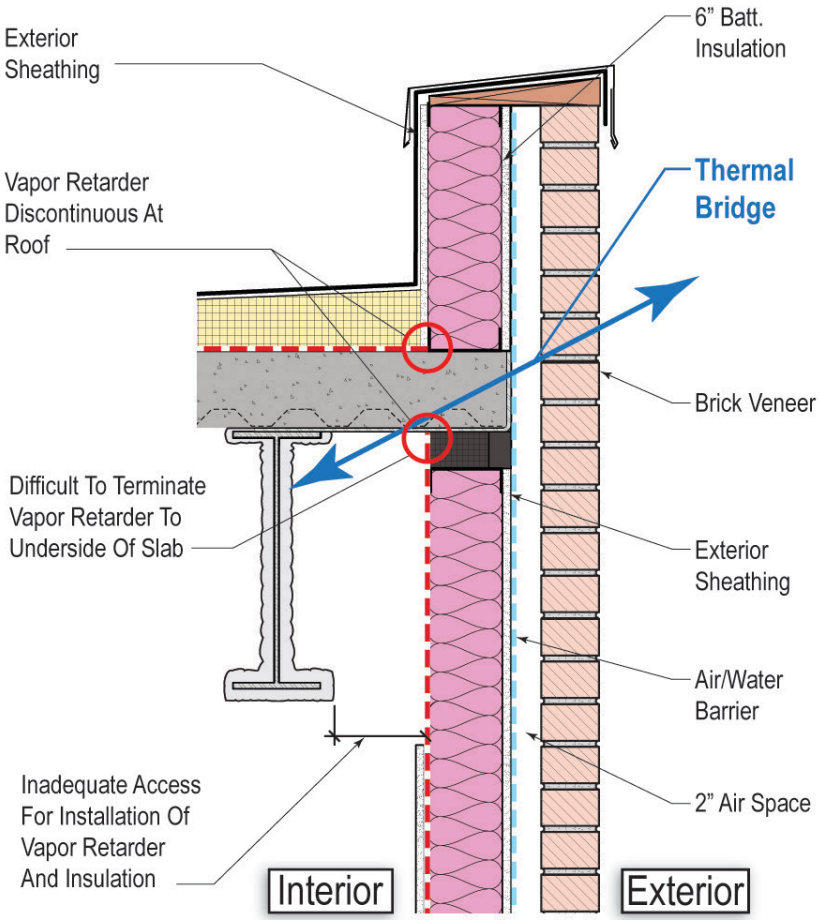

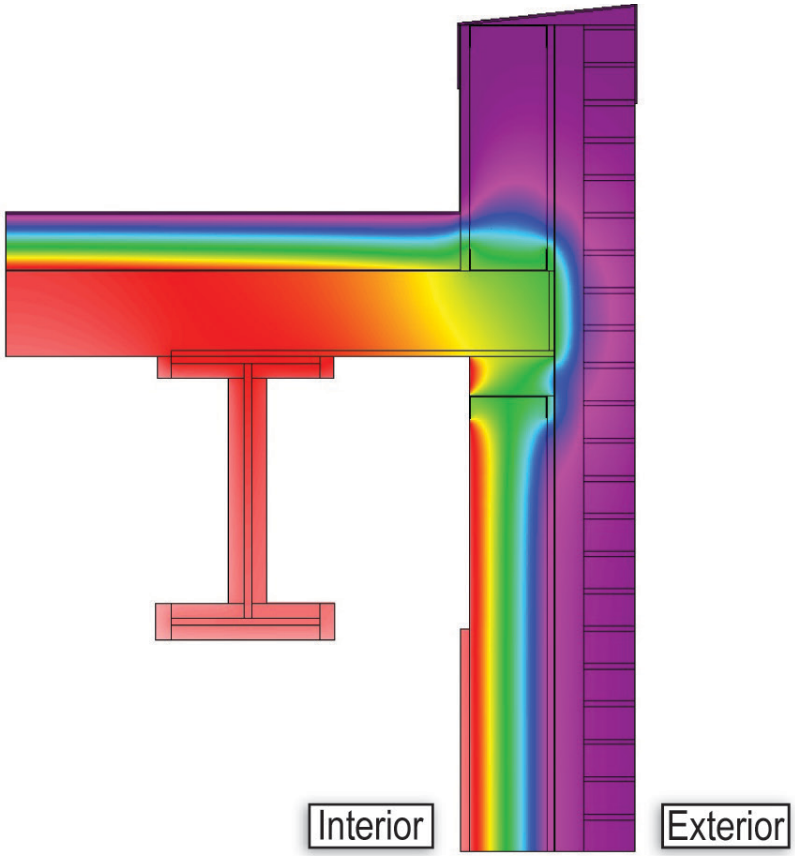

Difficult Construction Phasing and Installation of Roof to Wall Vapor Retarder Transition

Difficult Construction Phasing and Installation of Roof to Wall Vapor Retarder Transition

Difficult Construction Phasing and Installation of Roof to Wall Vapor Retarder Transition

Difficult Construction Phasing and Installation of Roof to Wall Vapor Retarder Transition

Difficult Construction Phasing and Installation of Roof to Wall Vapor Retarder Transition

Better Continuity

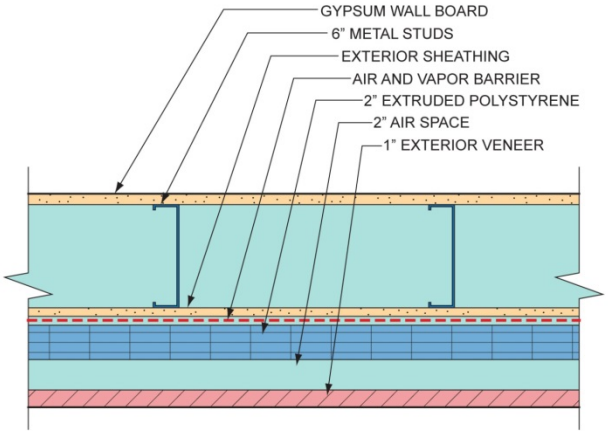

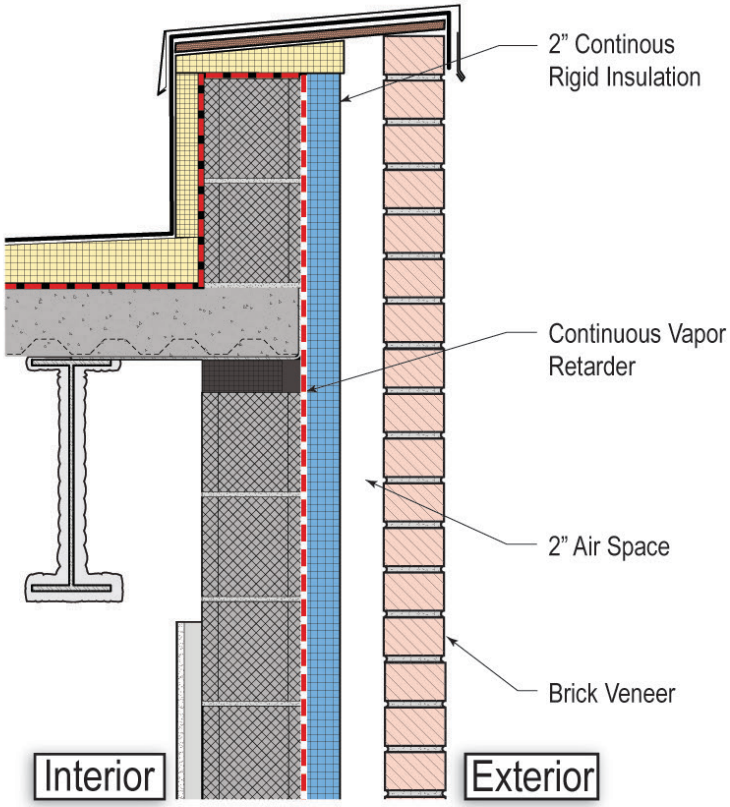

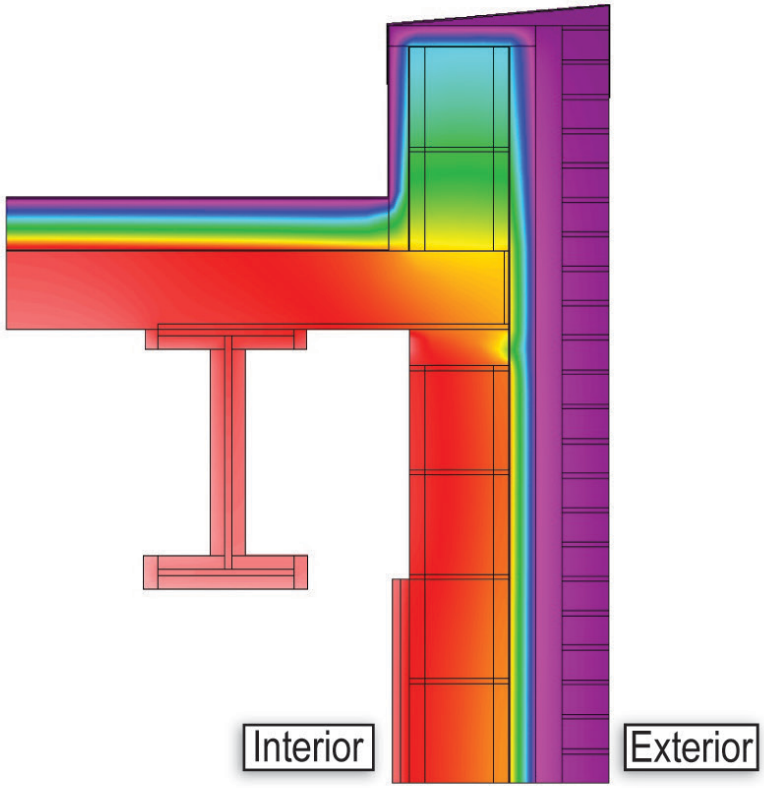

SYSTEM TRANSITIONS

Fenestration / Wall

and

Wall / Roof

First…

Understand the System

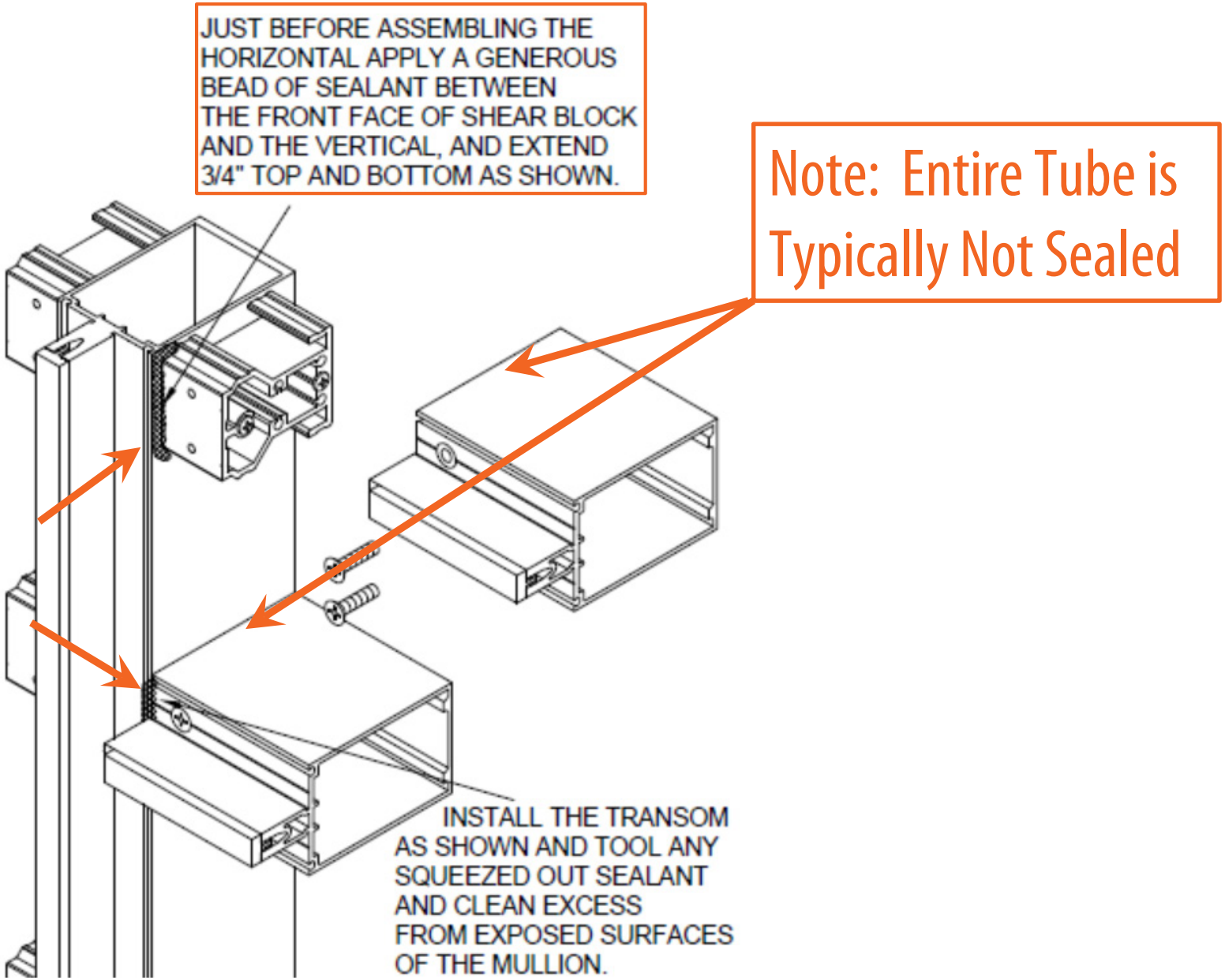

Courtesy of Kawneer

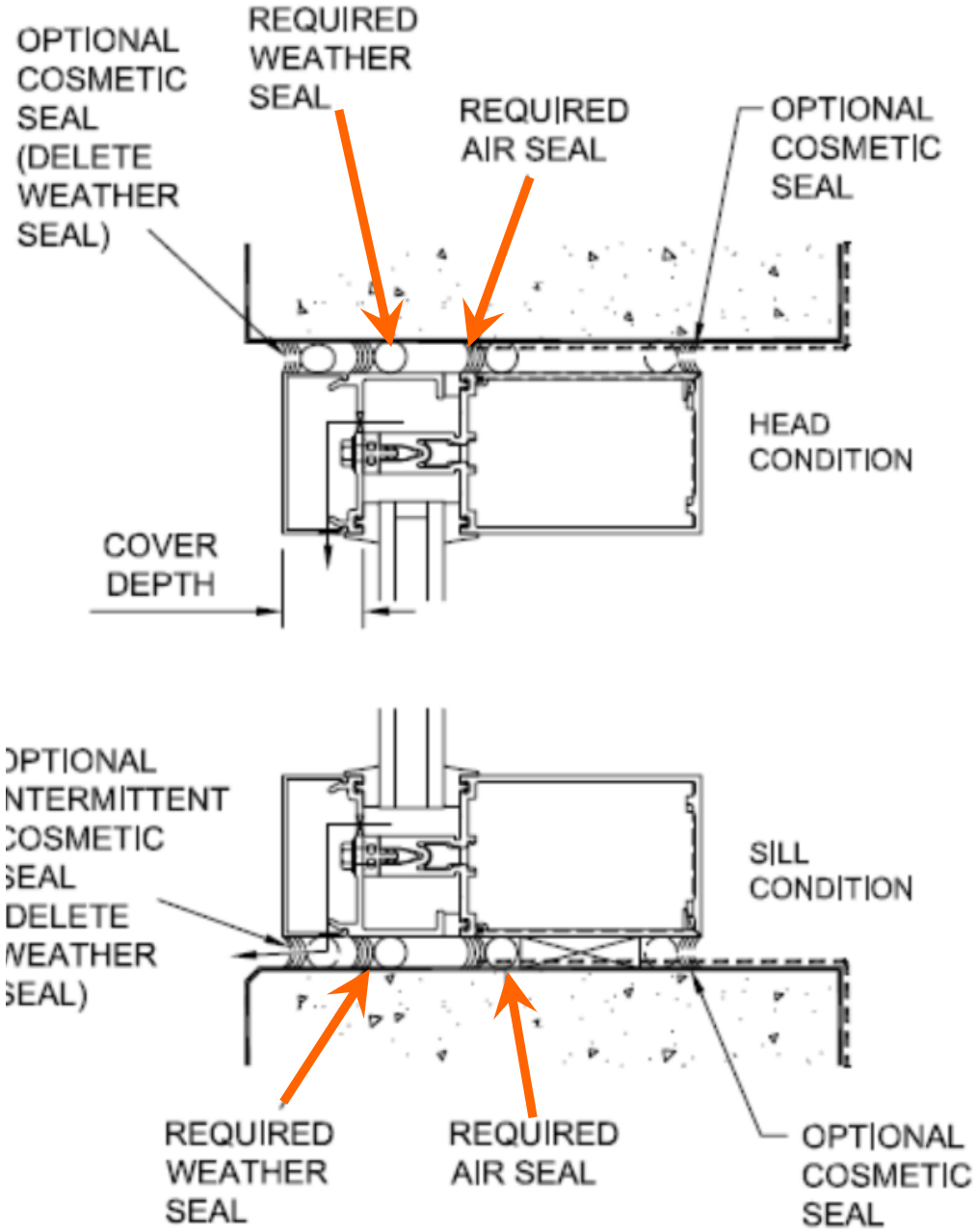

Courtesy of Kawneer

Curtain Wall Perimeter Seal Continuity

Cap Top and Bottom of Vertical Tubes

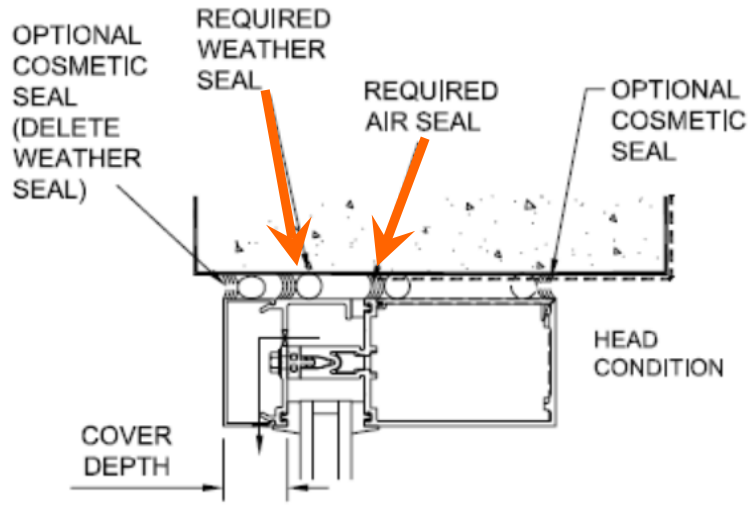

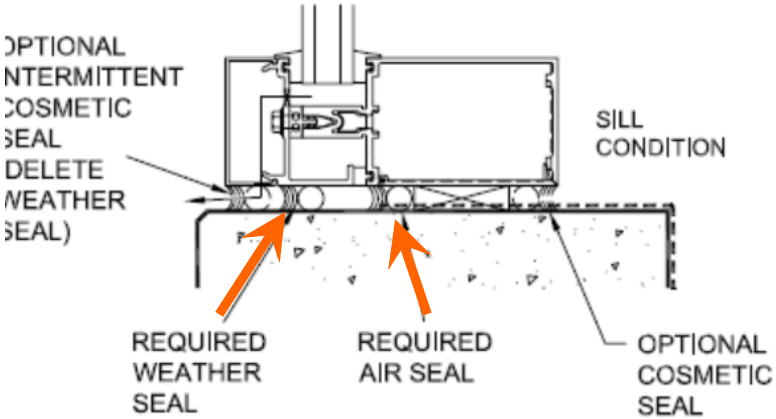

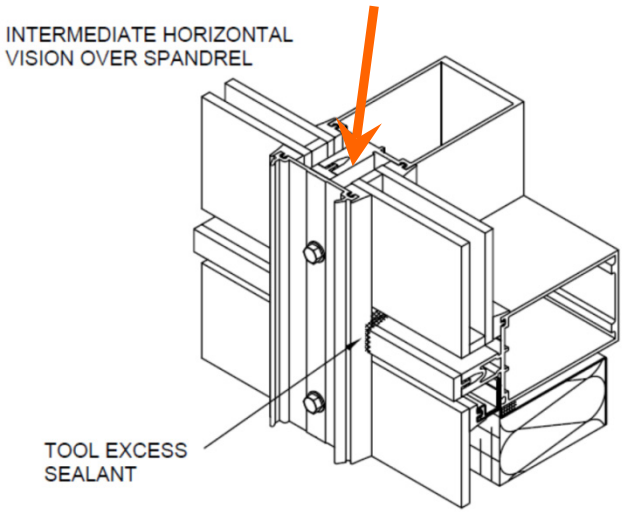

INSTALL HEAD AND SILL END CAPS 162-388. SEALANT MAY BE USED TO HOLD END CAP IN PLACE UNTIL BACKER ROD IS INSERTED.

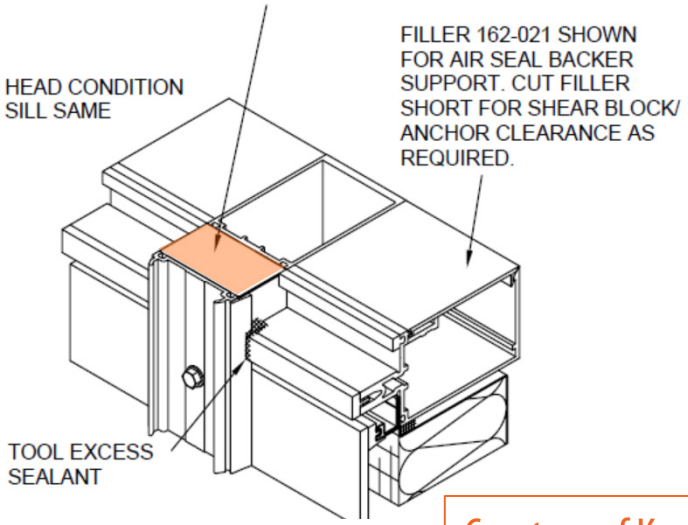

Courtesy of Kawneer

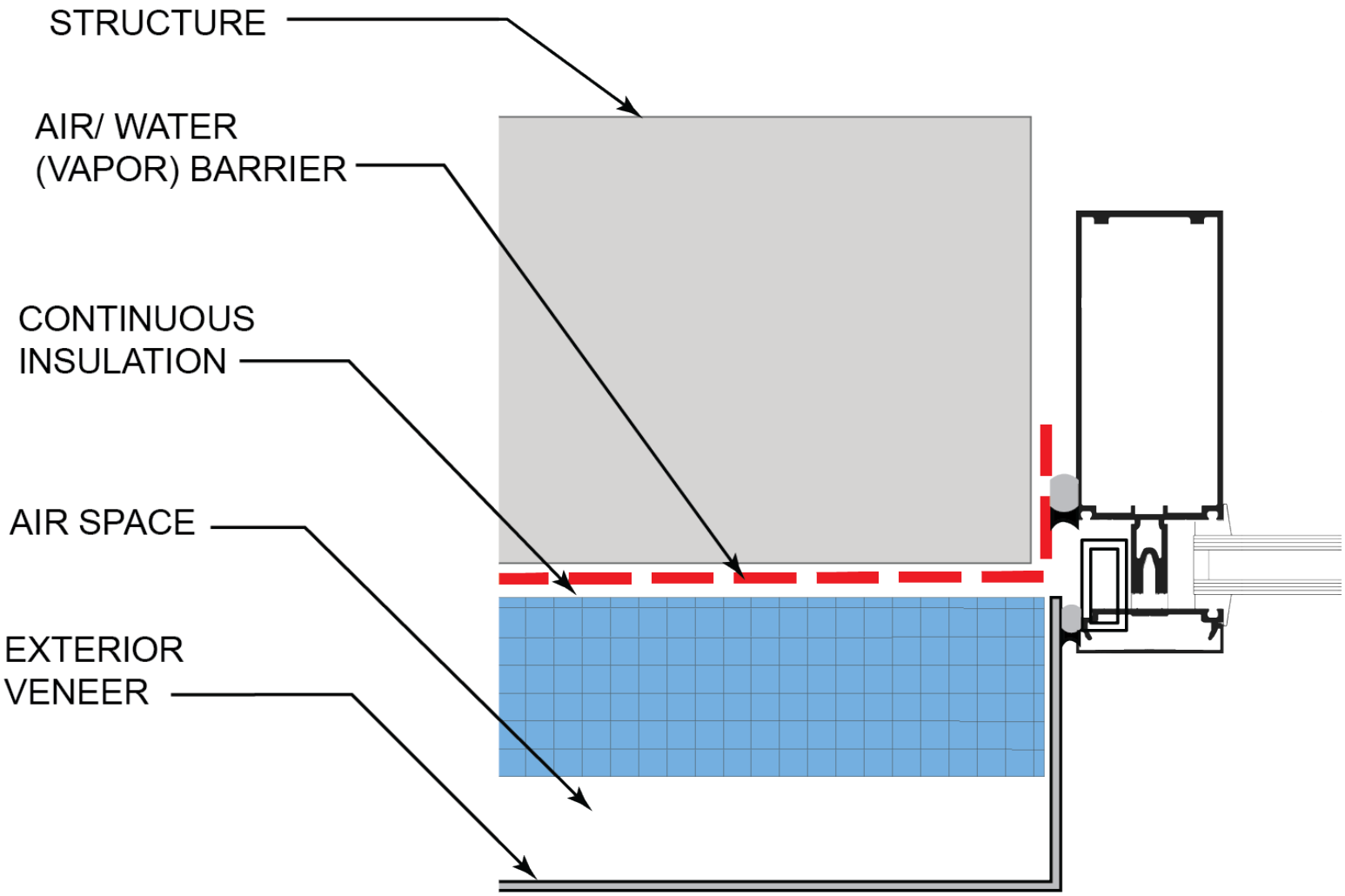
STRUCTURE
AIR/ WATER
(VAPOR) BARRIER
CONTINUOUS
INSULATION
AIR SPACE
EXTERIOR
VENEER

WATER

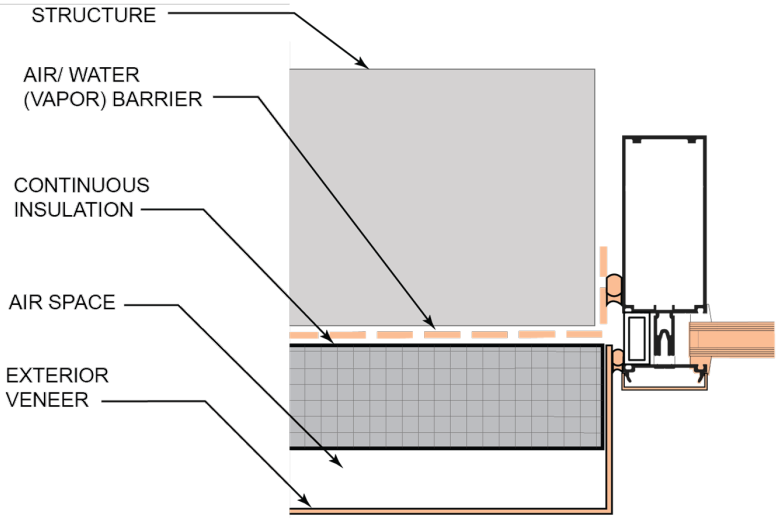

AIR

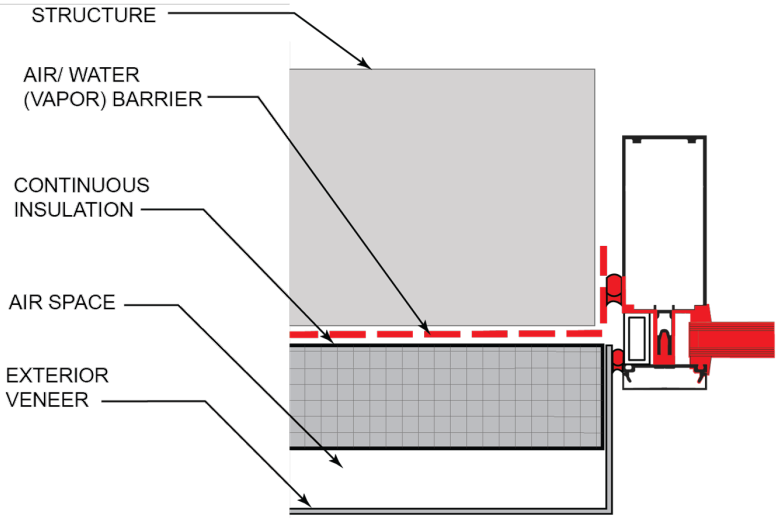

THERMAL

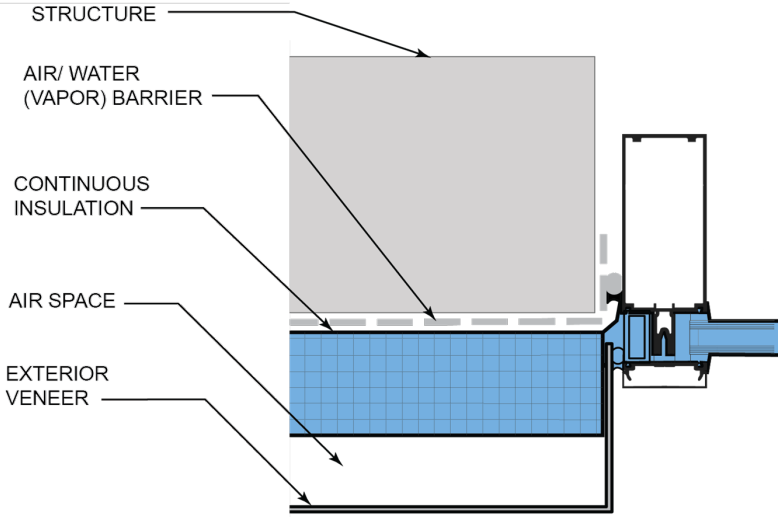

VAPOR

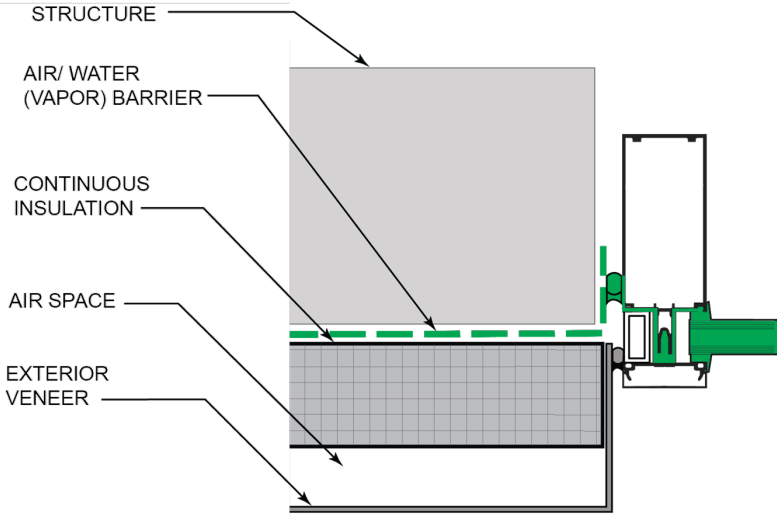

Curtain Wall Jamb

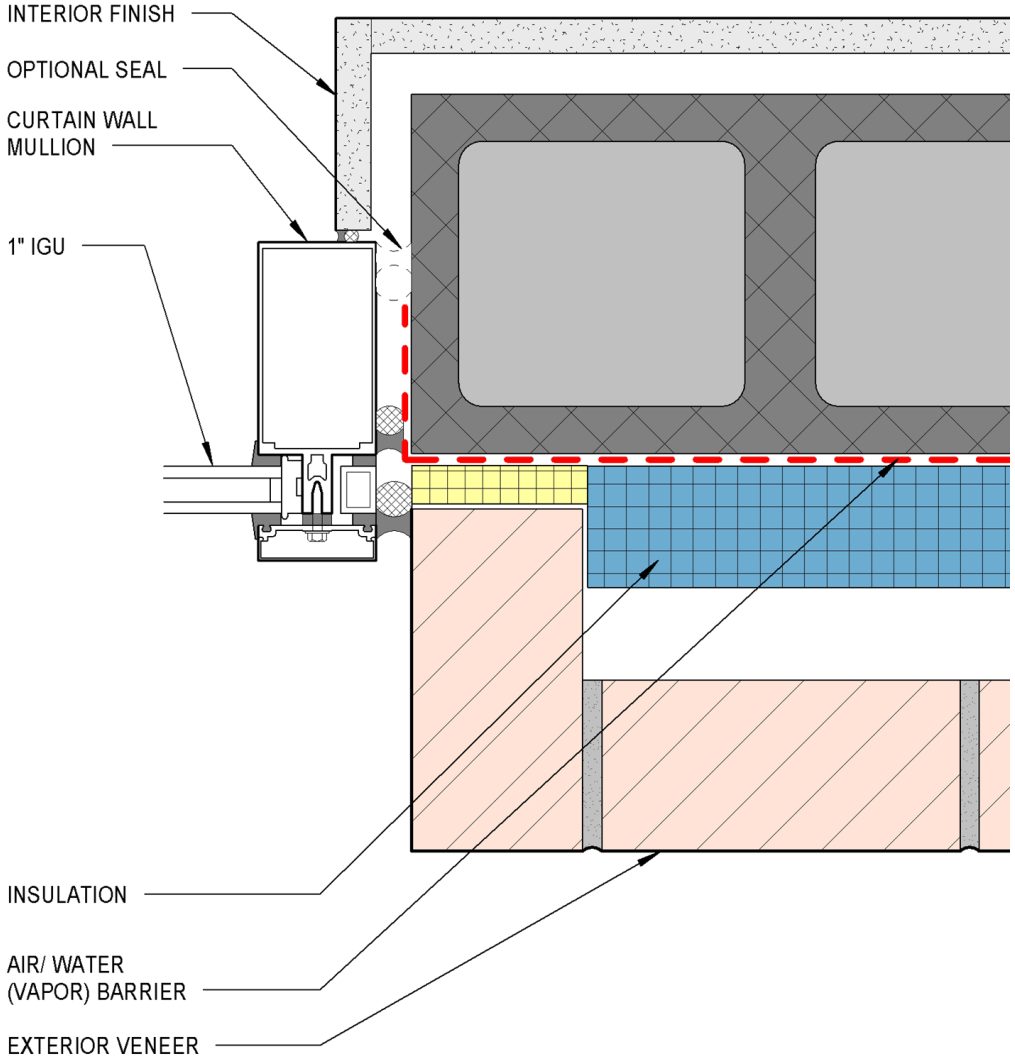

Water

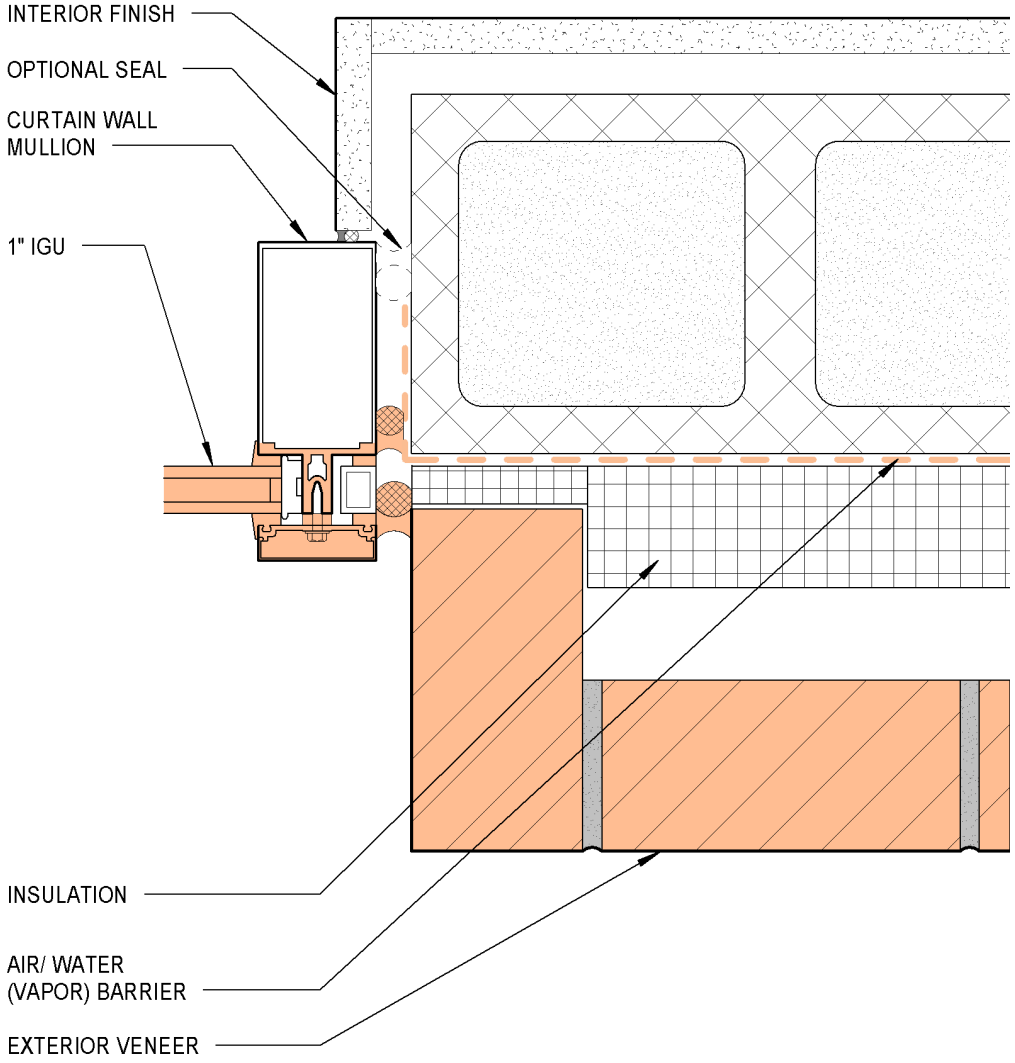
INTERIOR FINISH
OPTIONAL SEAL
CURTAIN WALL MULLION
1" IGU
INSULATION
AIR/ WATER (VAPOR) BARRIER
EXTERIOR VENEER

Air

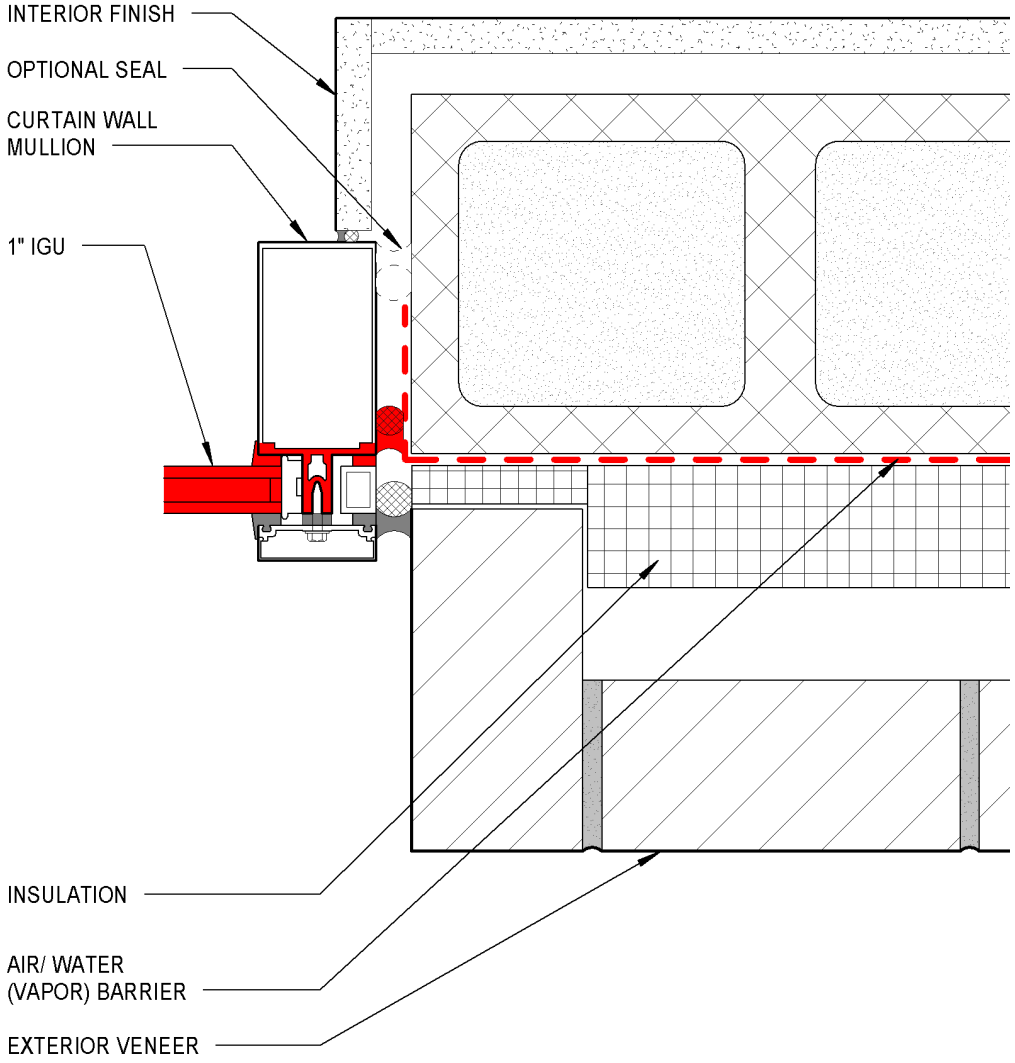
INTERIOR FINISH
OPTIONAL SEAL
CURTAIN WALL MULLION
1" IGU
INSULATION
AIR/ WATER (VAPOR) BARRIER
EXTERIOR VENEER

Thermal

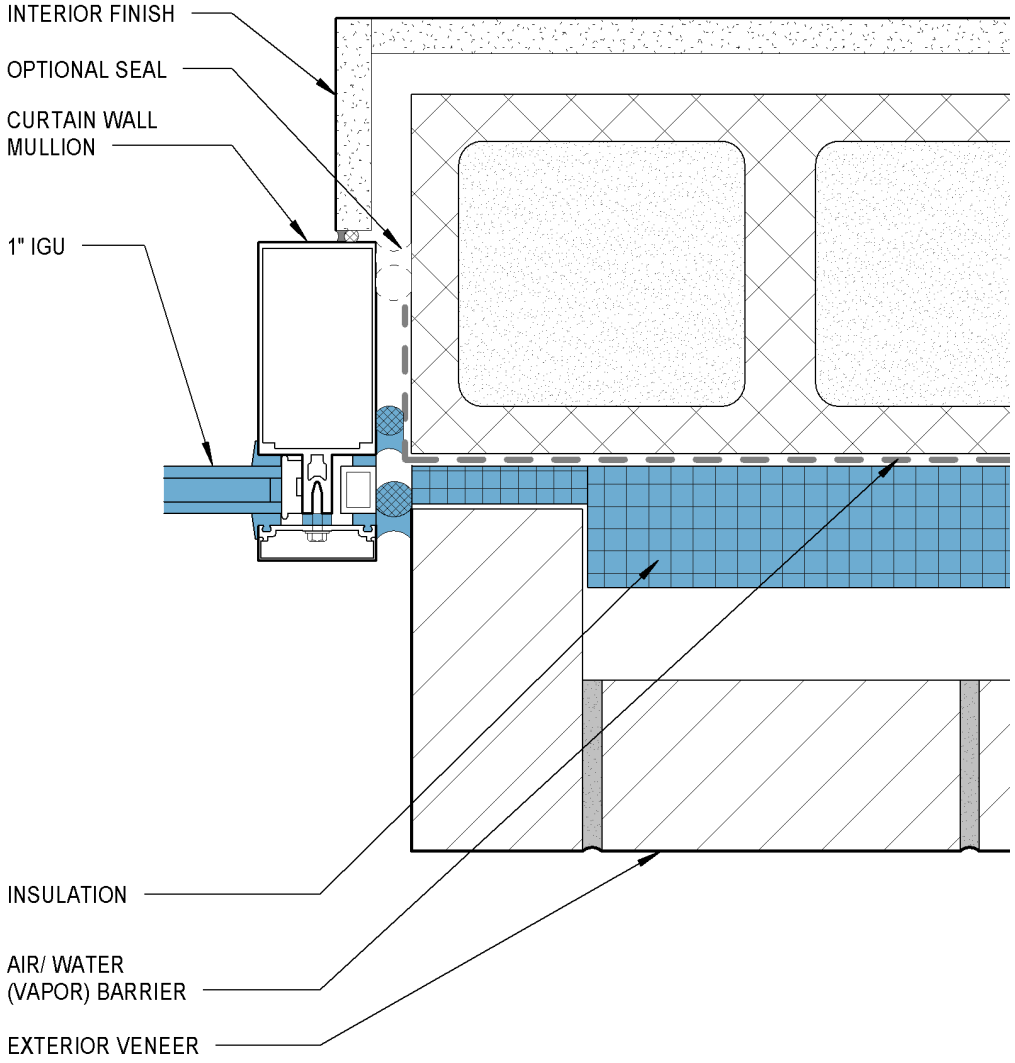
INTERIOR FINISH
OPTIONAL SEAL
CURTAIN WALL MULLION
1" IGU
INSULATION
AIR/ WATER (VAPOR) BARRIER
EXTERIOR VENEER

Vapor

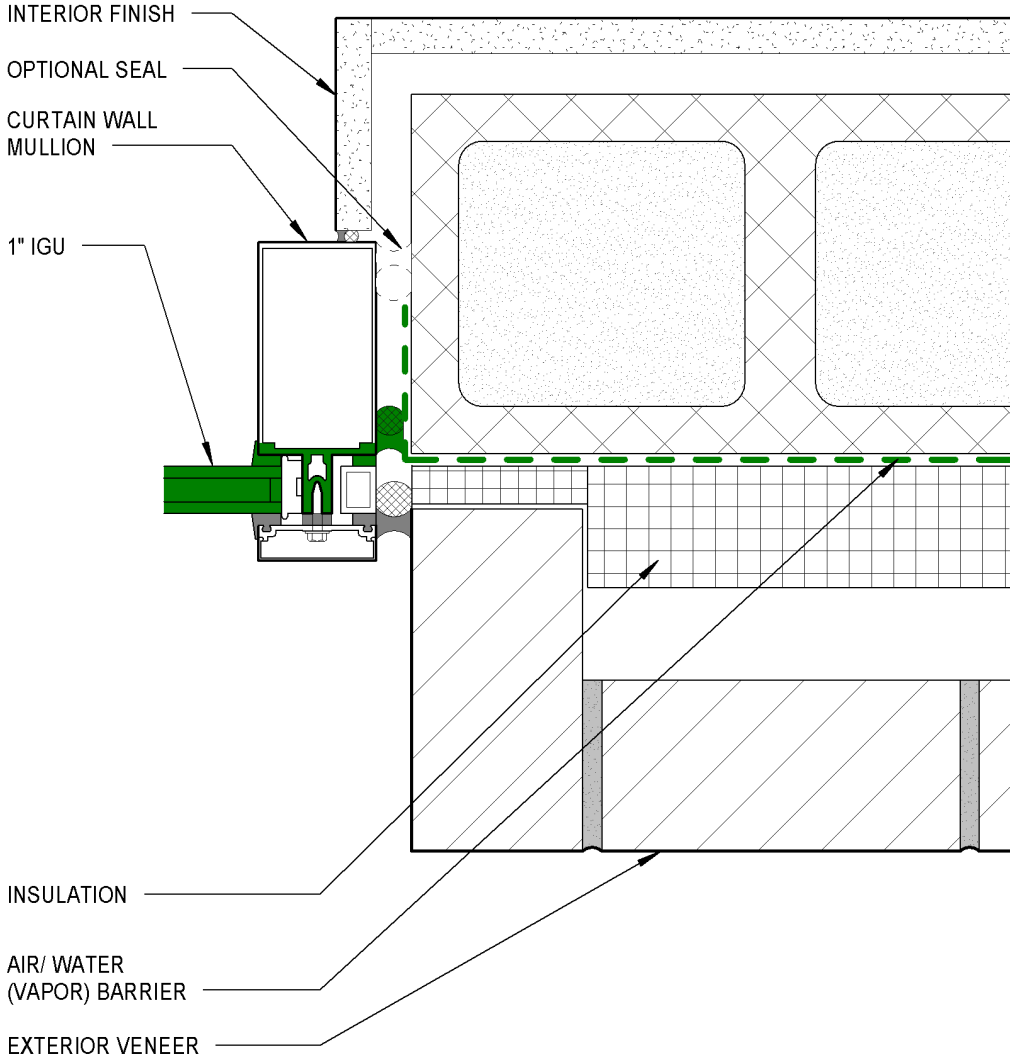
INTERIOR FINISH
OPTIONAL SEAL
CURTAIN WALL MULLION
1" IGU
INSULATION
AIR/ WATER (VAPOR) BARRIER
EXTERIOR VENEER

Two Methods to Achieve Continuity

Sealant Transition

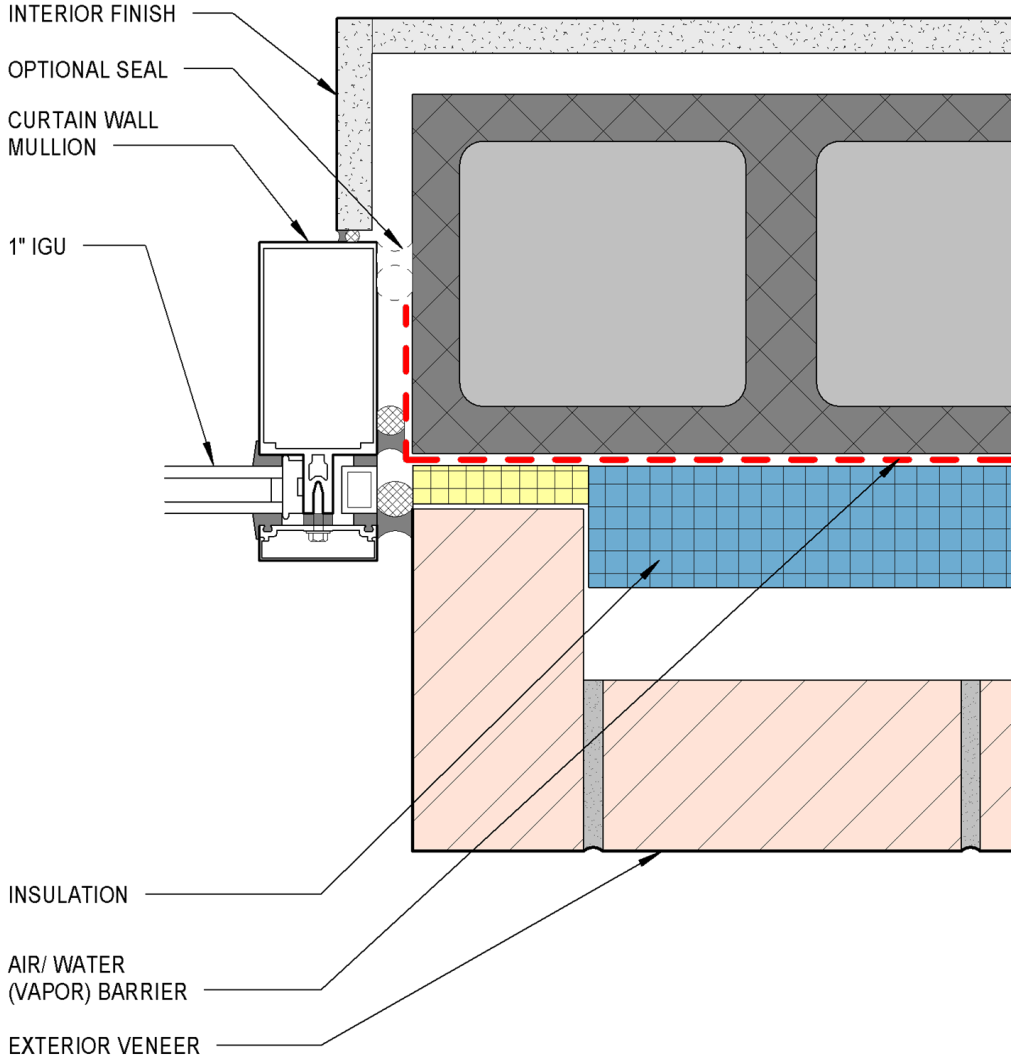

Membrane Transition

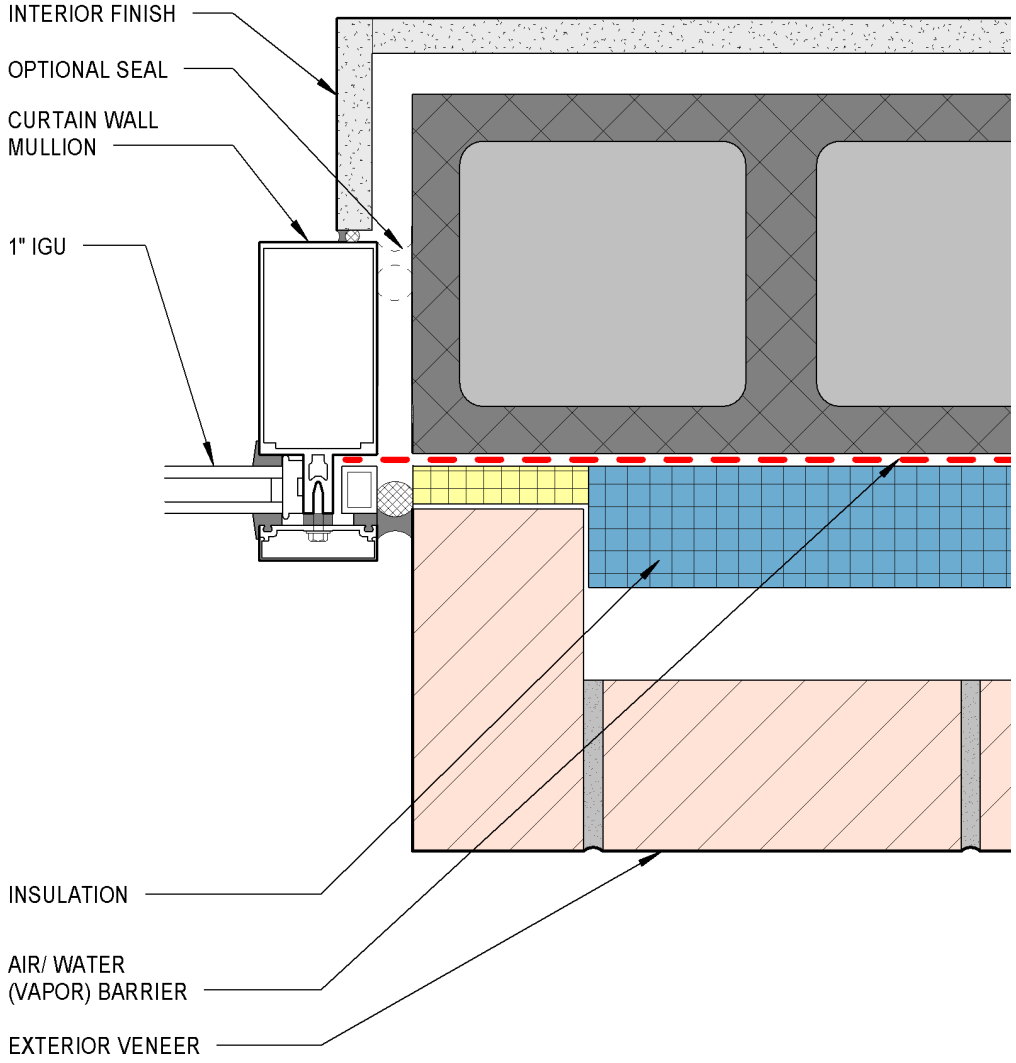

Sealant Transition

BENEFITS

- Future Sealant Repair
- Perimeter Sealant is Compatible with Curtain Wall Sealants
- Constructability / Sequence

LIMITATIONS

- Perimeter Sealant Alignment
- Sealant width tolerance
- Sealant/Membrane Compatibility

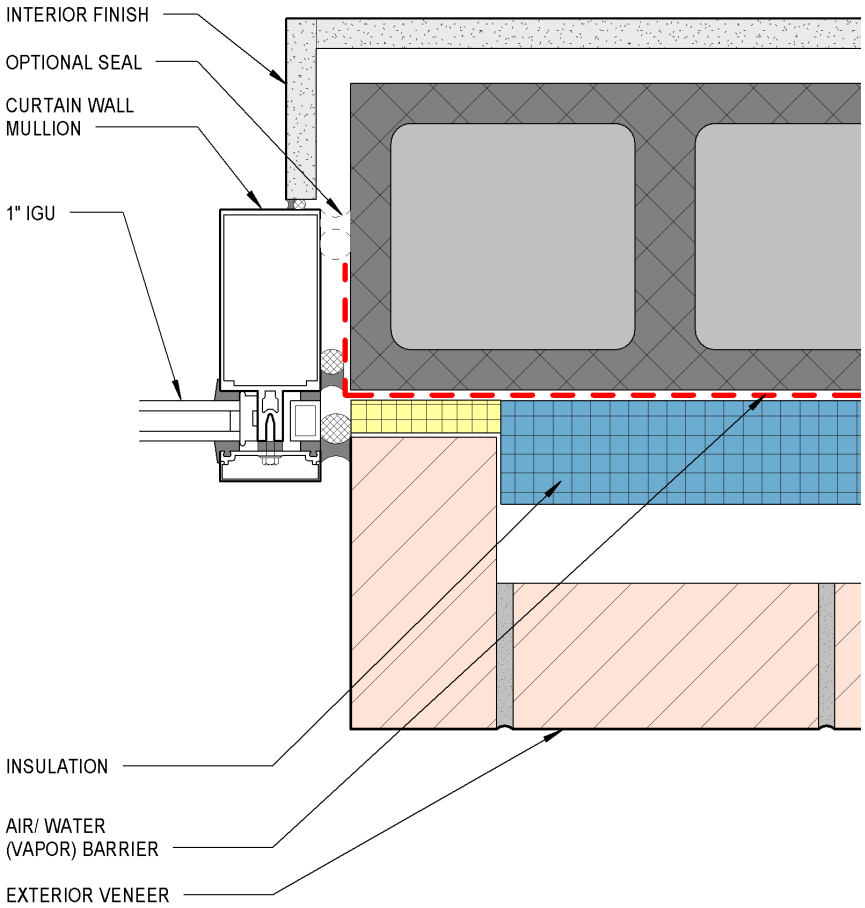

Sealant Transition

MATERIALS

- Fluid Applied Flashing
  - Seamless
  - Thickness
  - Curing
  - Compatibility
  - Water Absorption

- Self Adhered
  - Seams
  - Buildup of Layers
  - Adhesion
  - Sealant Compatibility

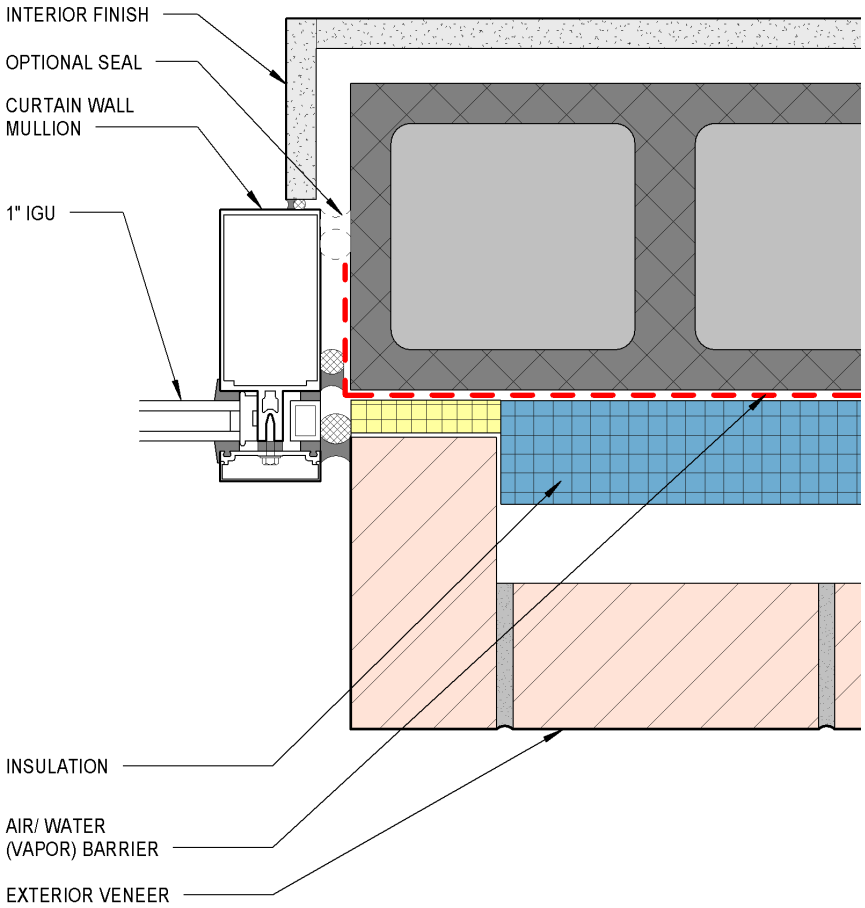

Membrane Transition

BENEFITS

- Eliminates Sealant/Membrane Compatibility Issue

LIMITATIONS

- Constructability / Sequencing
- Seams
- Certain Membrane Span Limits
- Future Repair Issues
- Requires Change of Gaskets
- Internal Curtain Wall Sealant Compatibility with Membrane
- 3D Terminations are Difficult

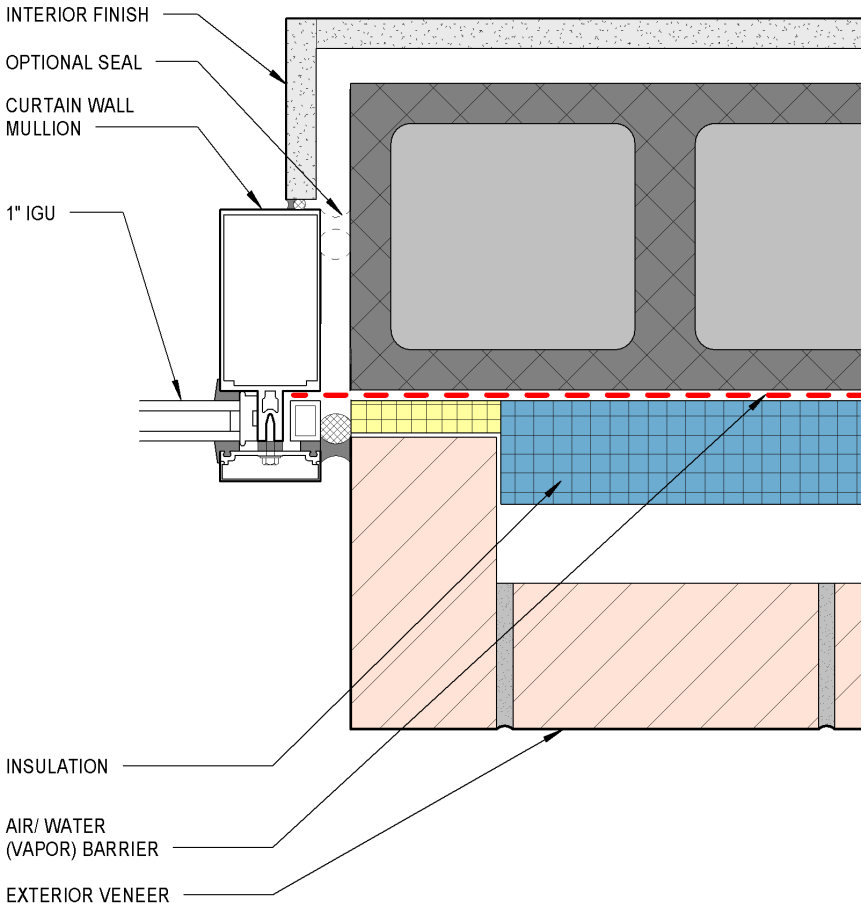

Membrane Transition

MATERIALS

- Self Adhered Rubberized Asphalts
- Pre-cured Silicone
- Sheet Metal

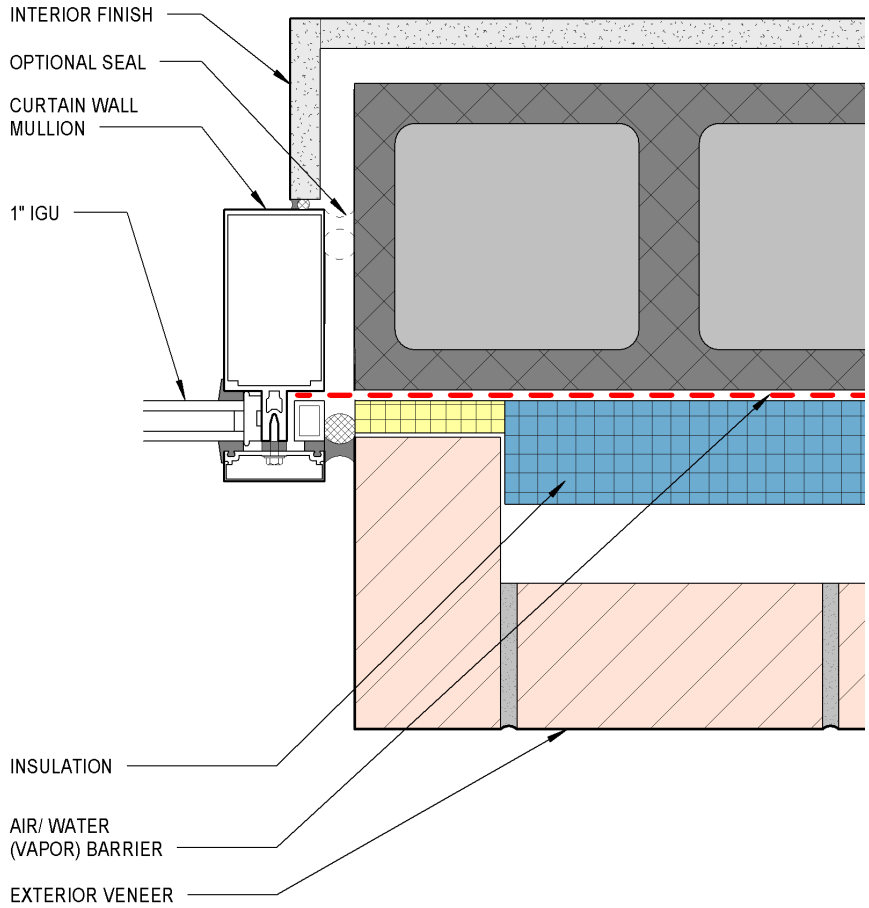

Sequence of Installation

Sealant Transition

Sealant Transition

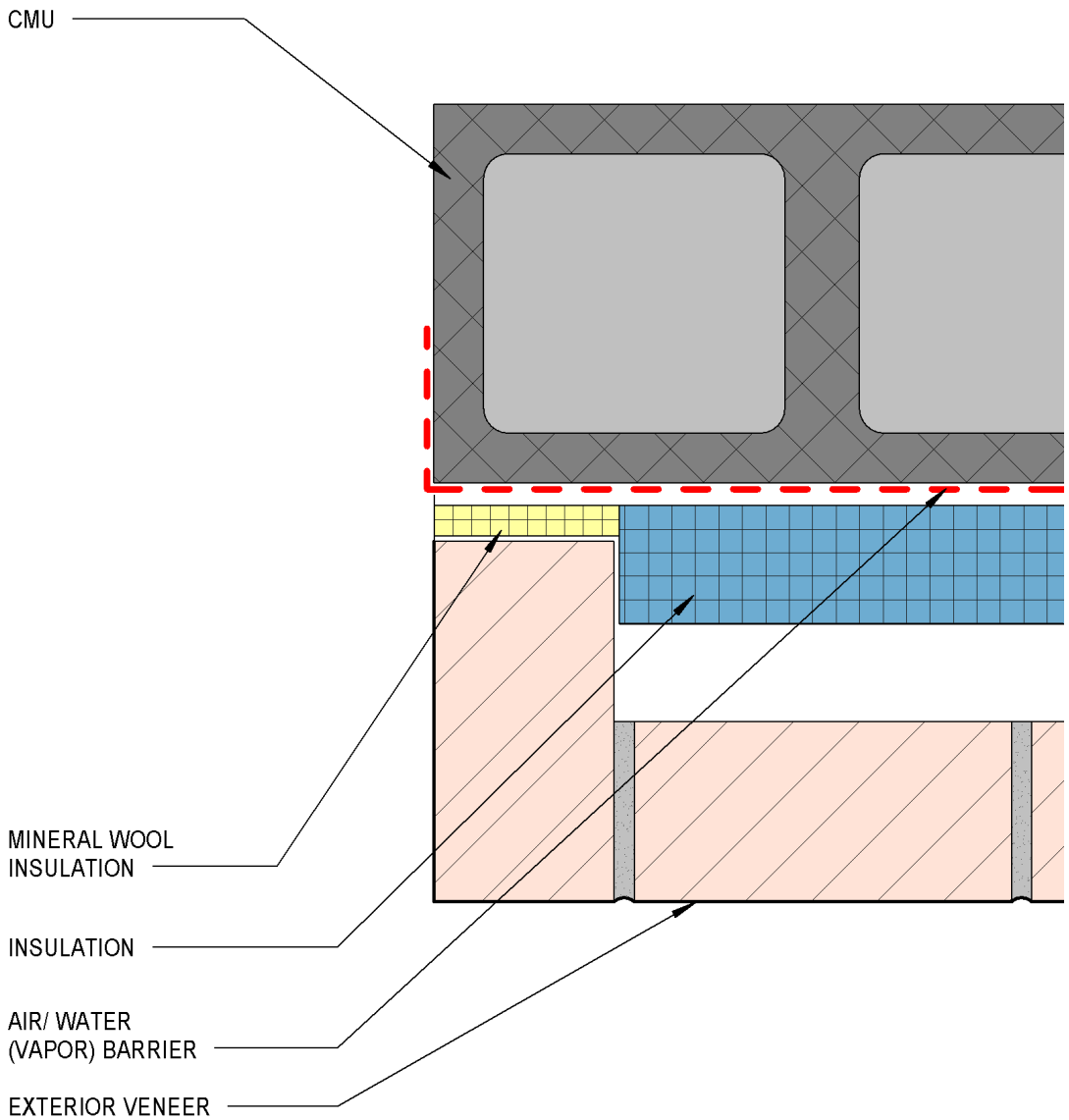

Sealant Transition

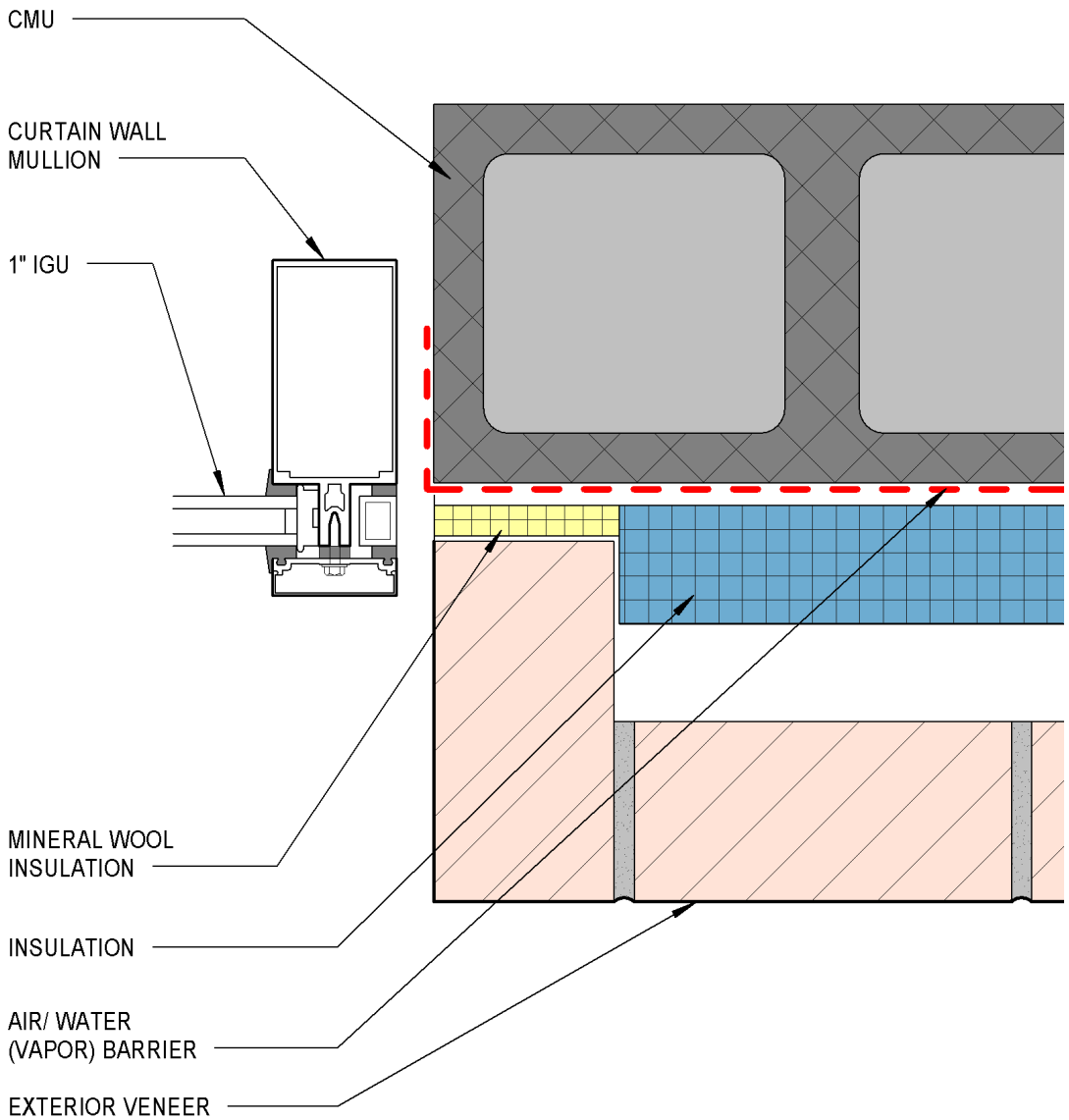

Sealant Transition

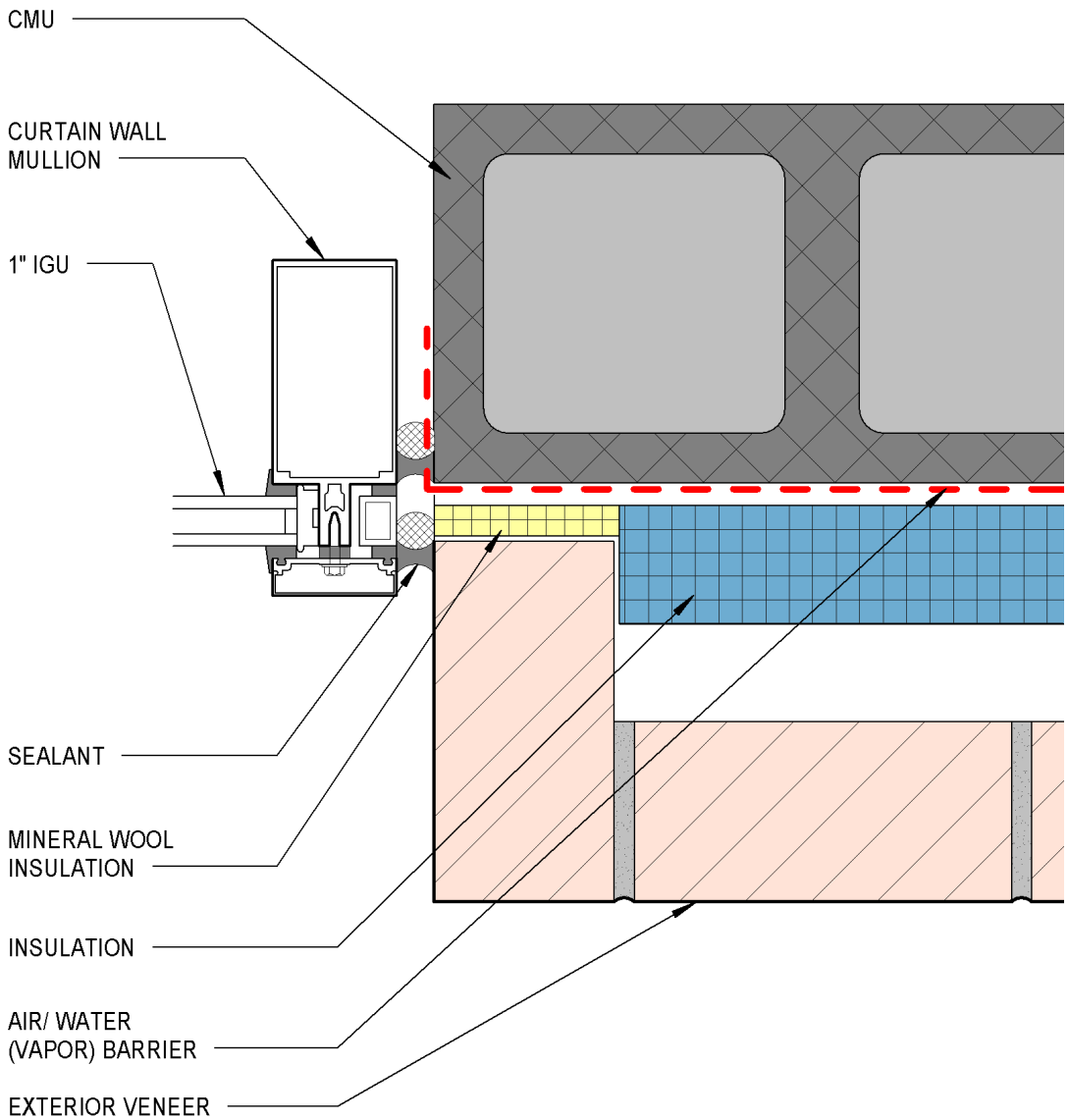

Membrane Transition 1

Membrane Transition 1

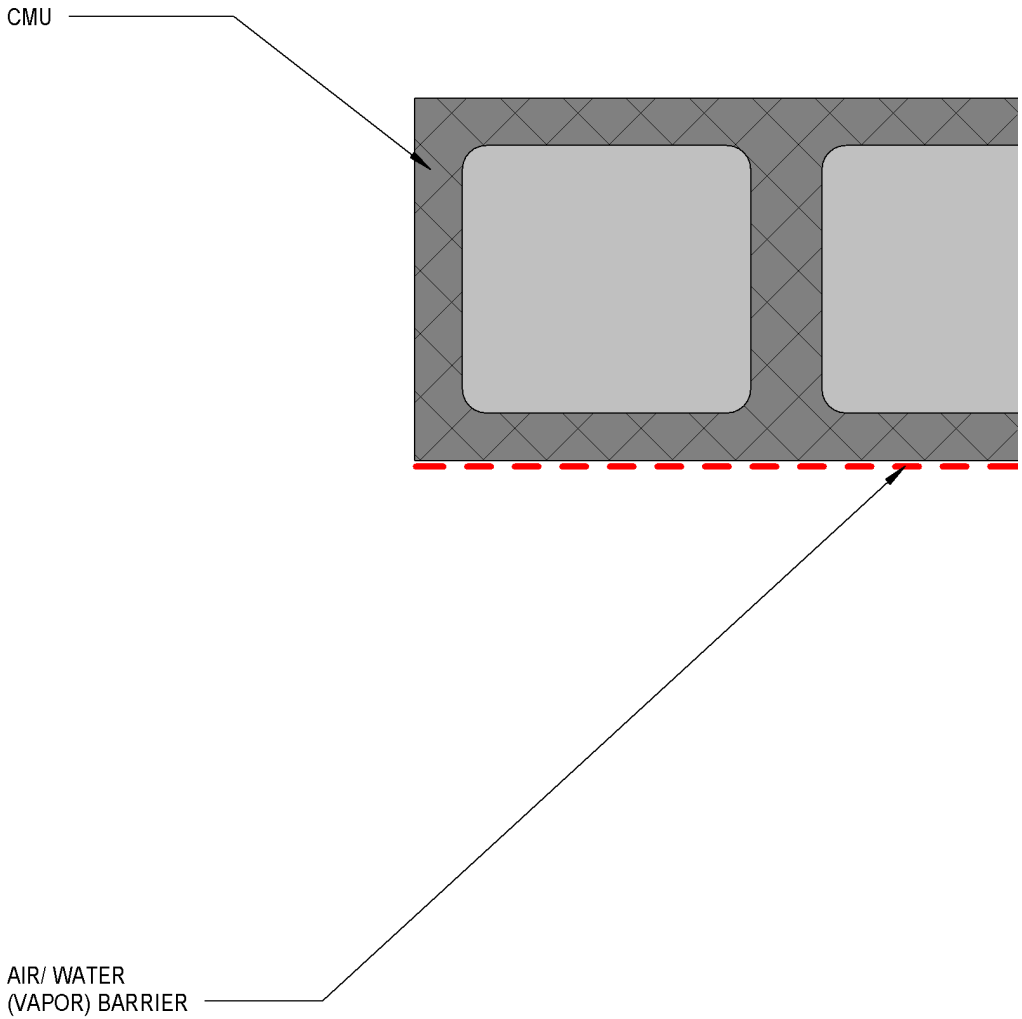

Membrane Transition 1

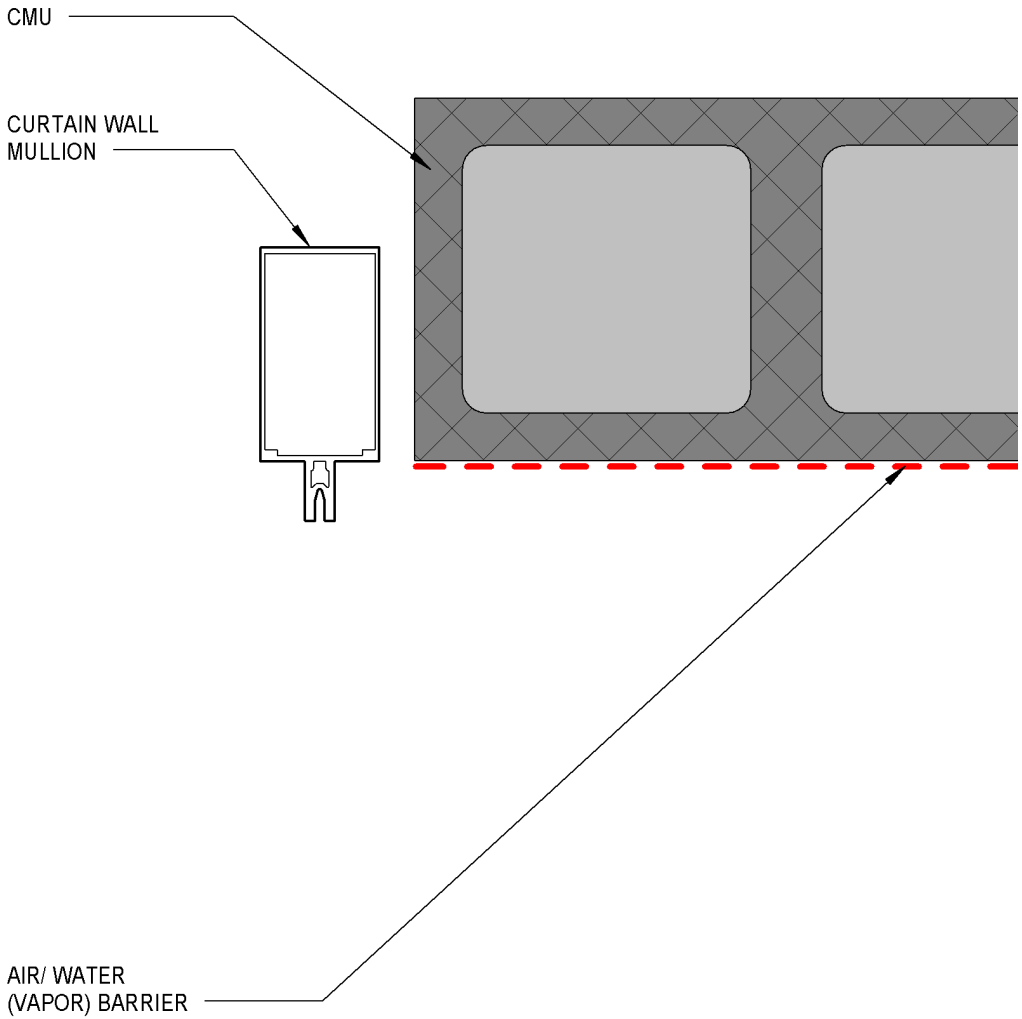

Membrane Transition 1

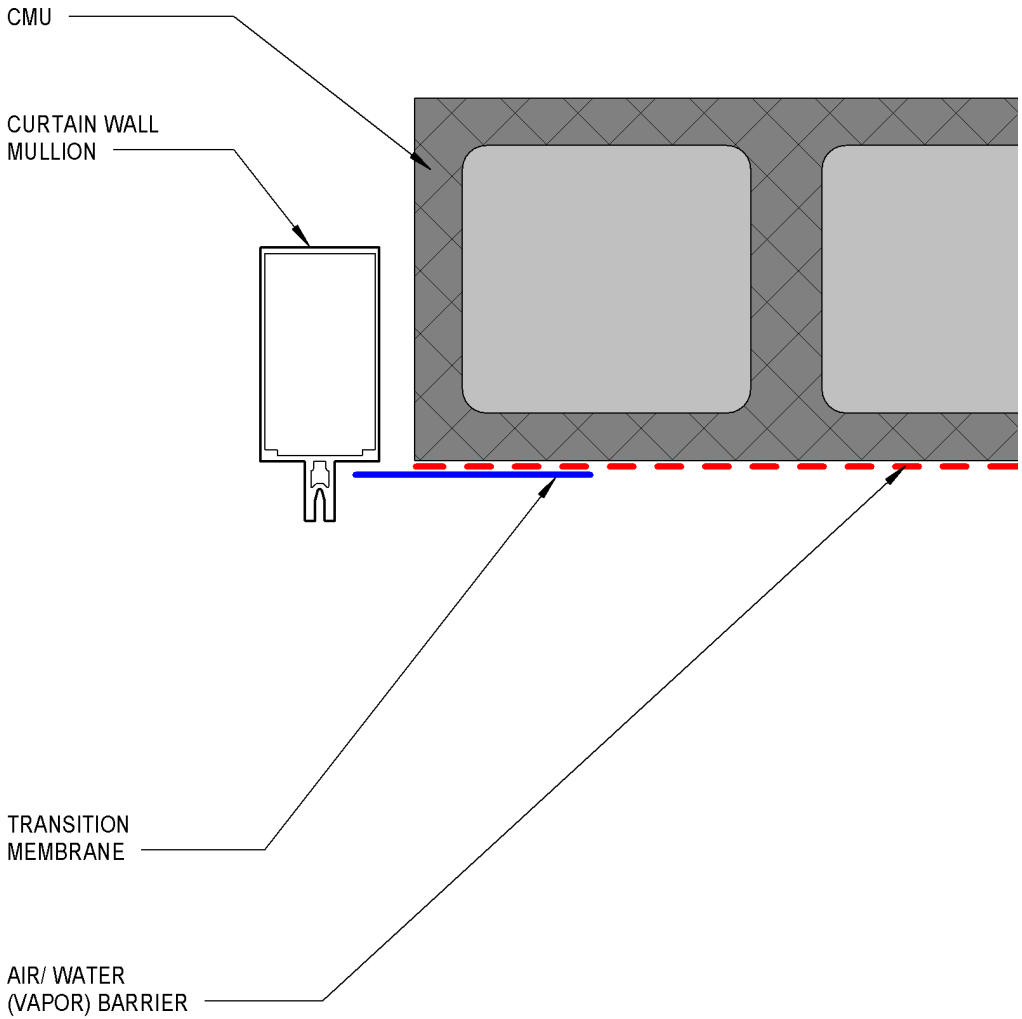

Membrane Transition 1

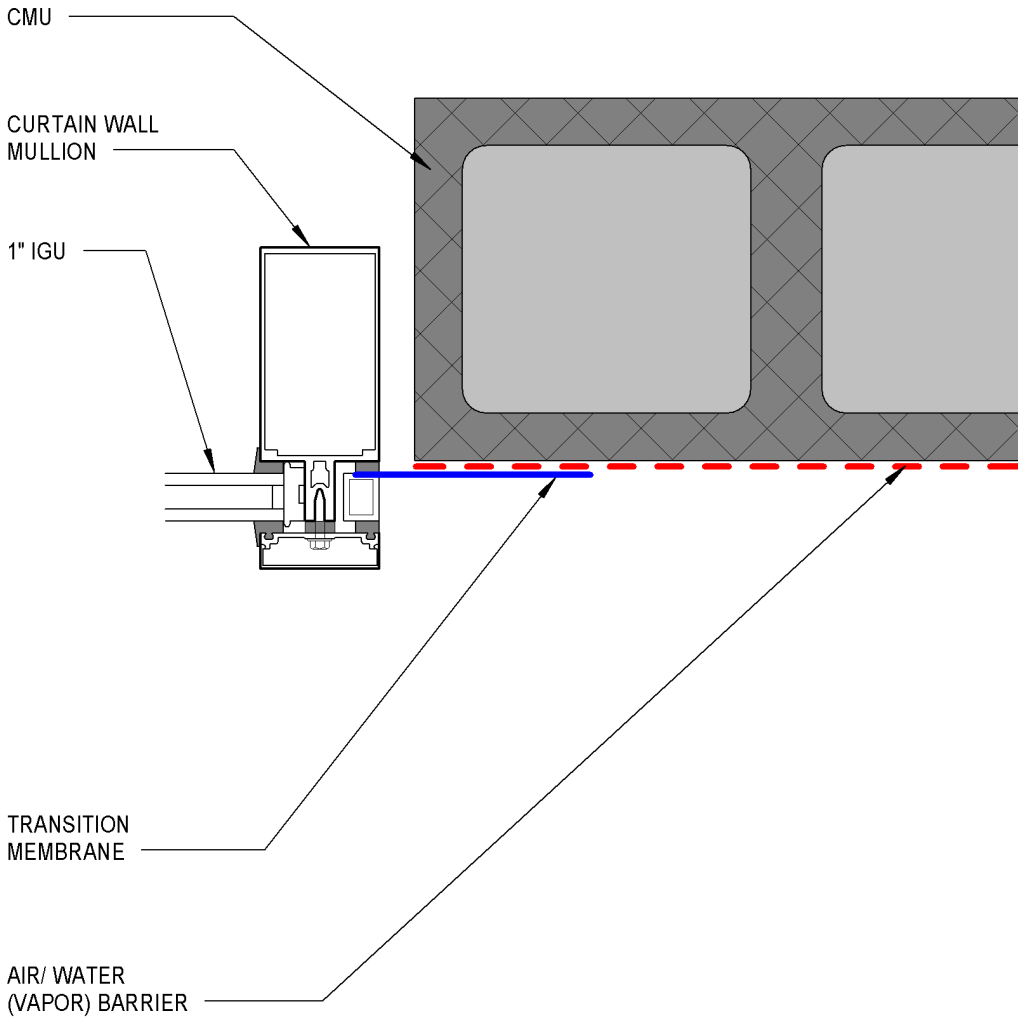

Membrane Transition 1

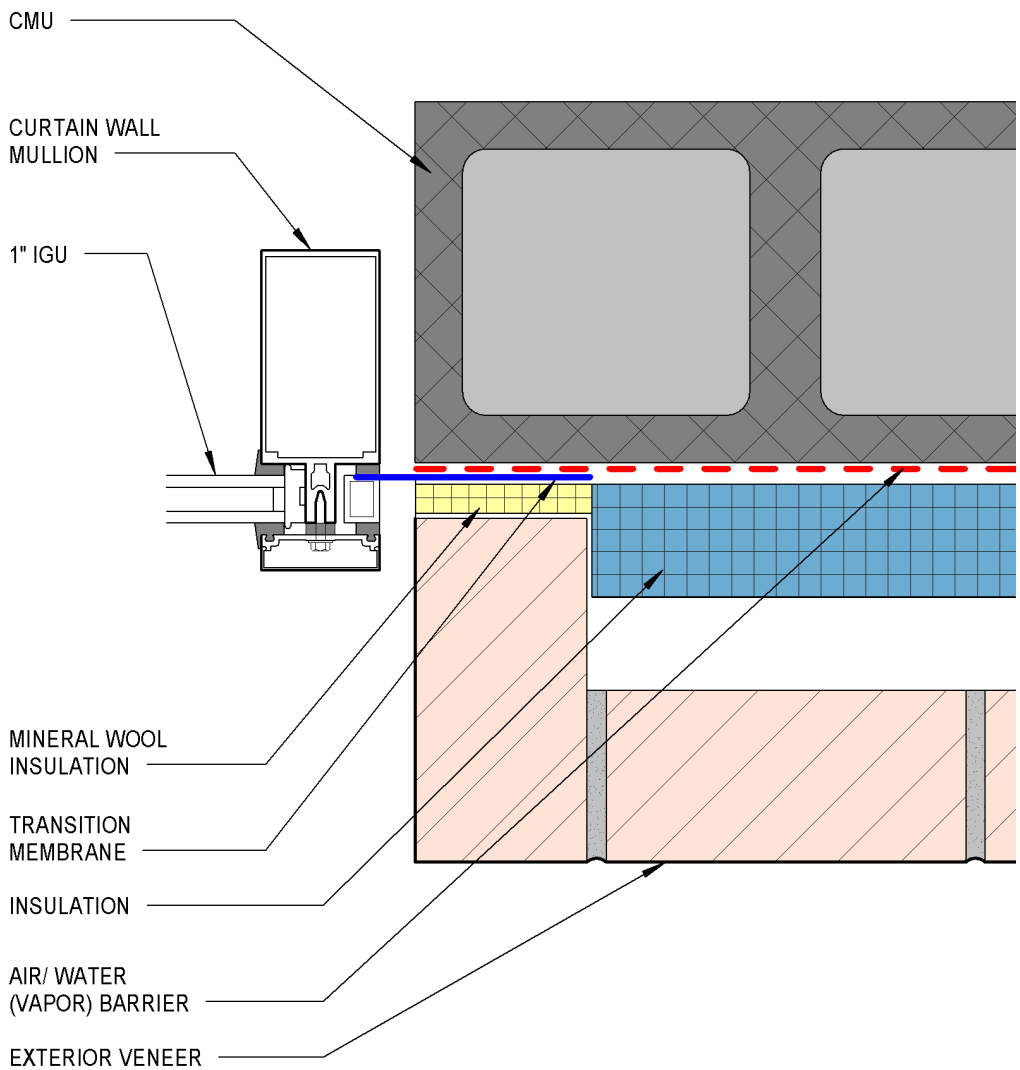

Membrane Transition 1

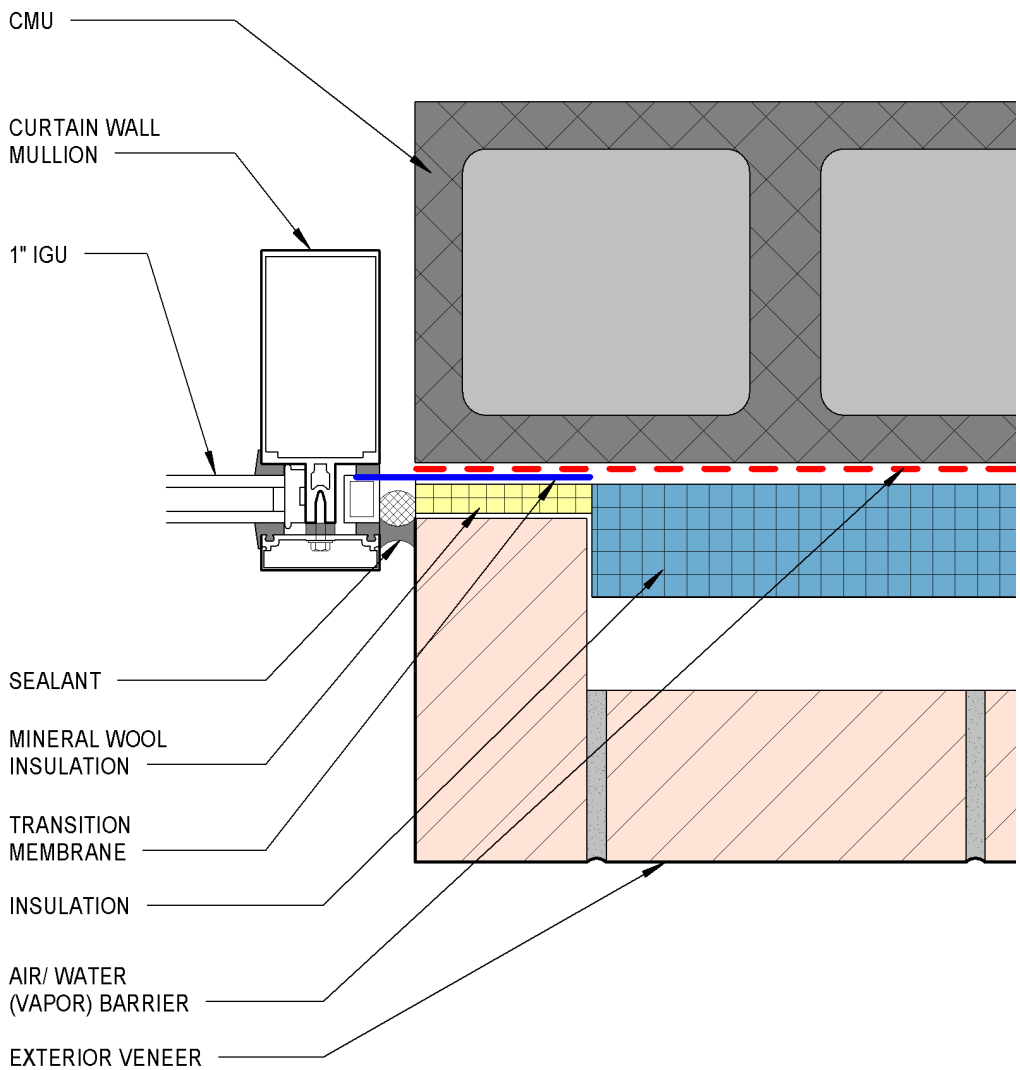

Membrane Transition 2

Membrane Transition 2

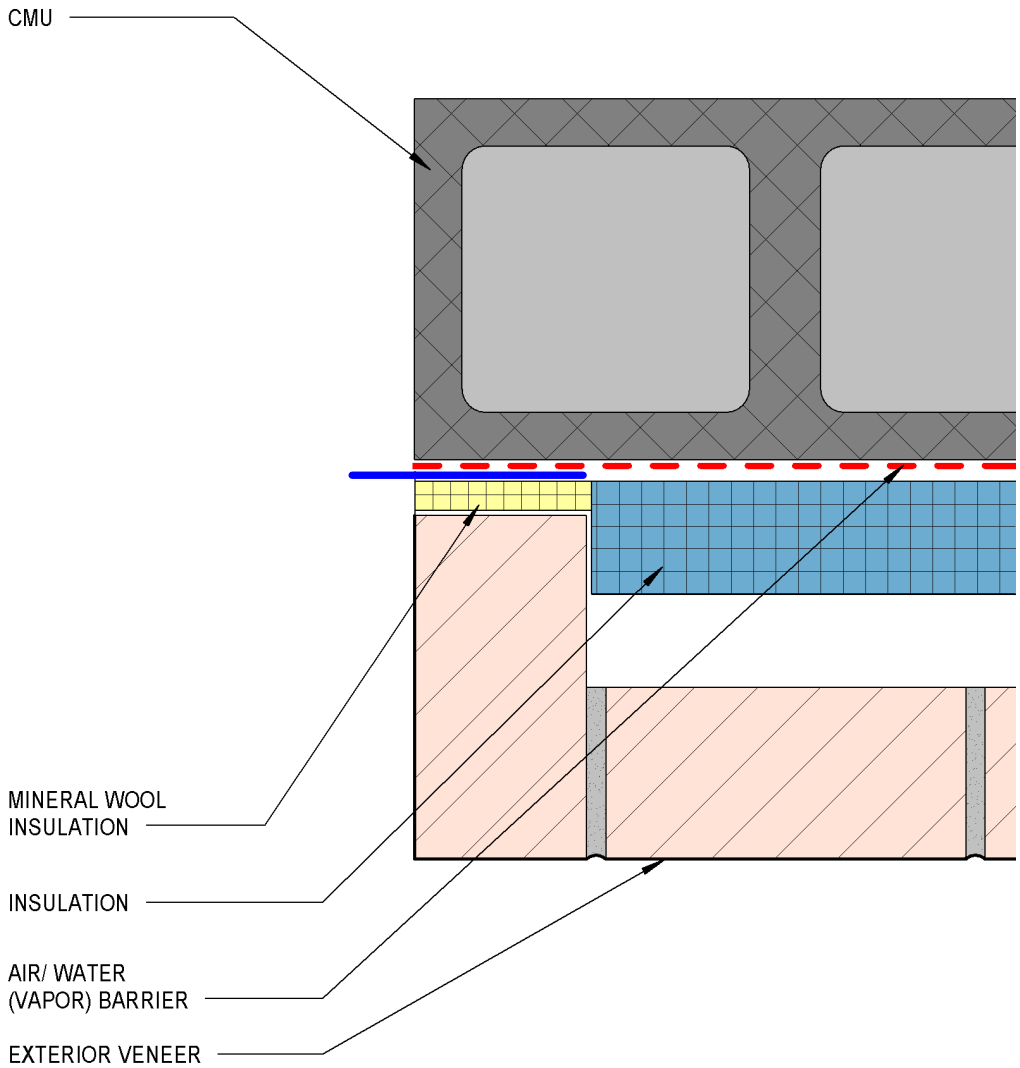

Membrane Transition 2

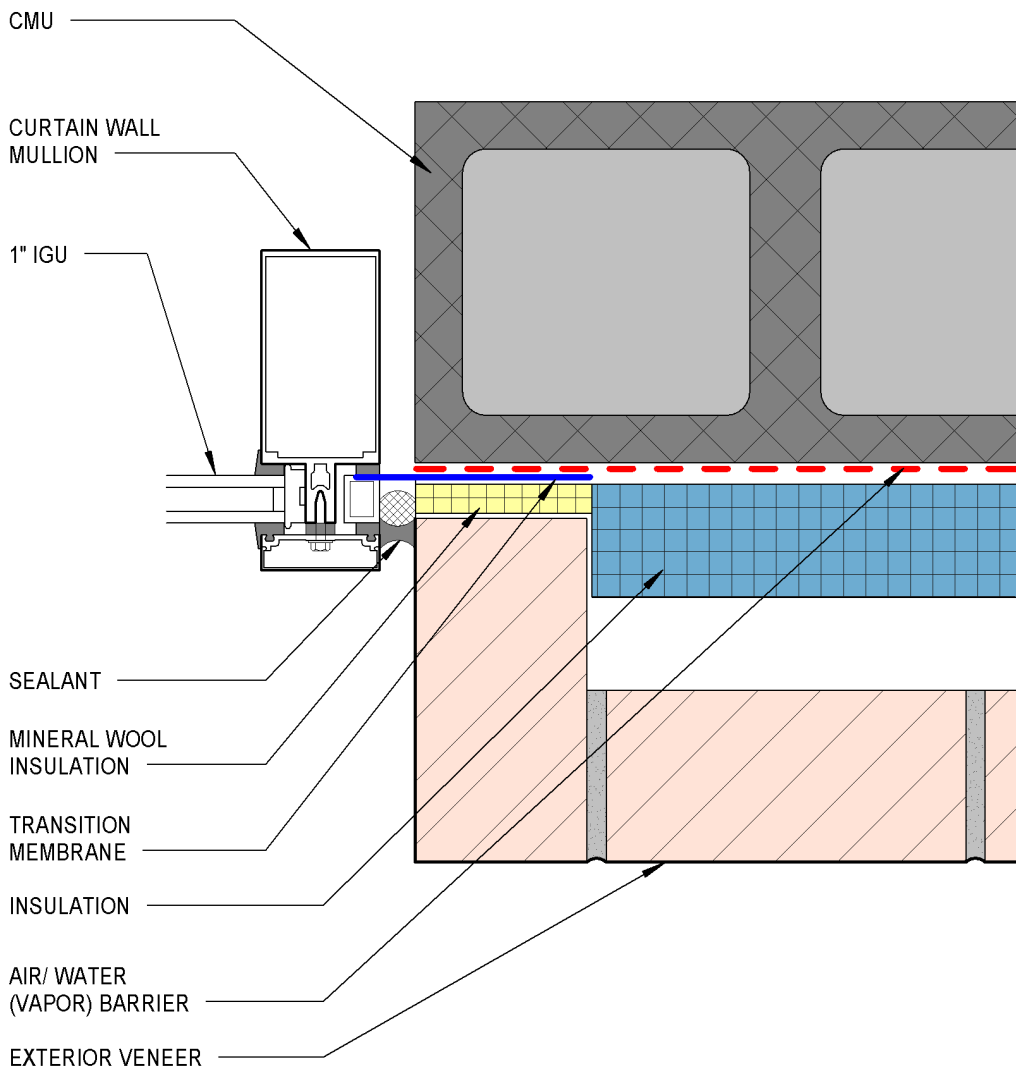

Thermal Enhancement

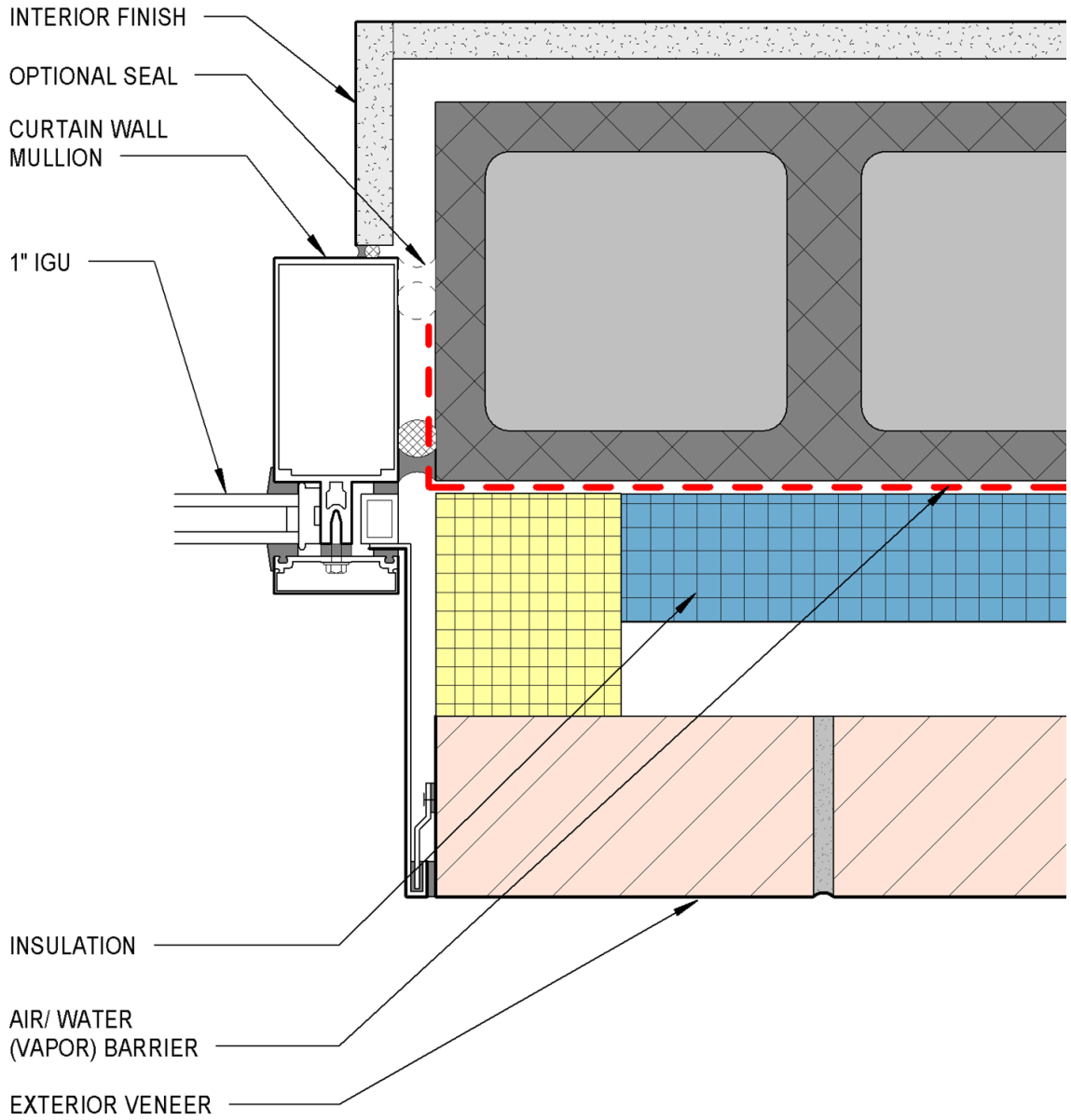
INTERIOR FINISH
OPTIONAL SEAL
CURTAIN WALL MULLION
1" IGU
INSULATION
AIR/ WATER (VAPOR) BARRIER
EXTERIOR VENEER

Perimeter Mullion Options

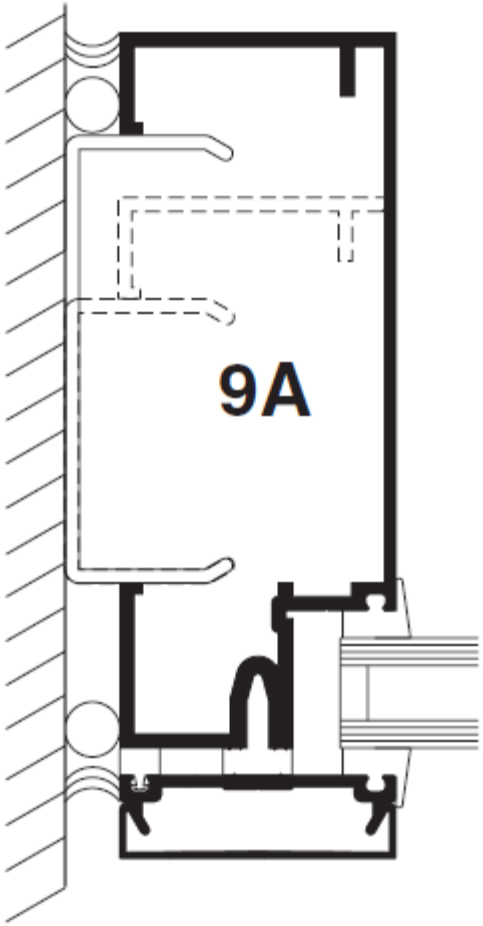

Lowest Thermal Performance

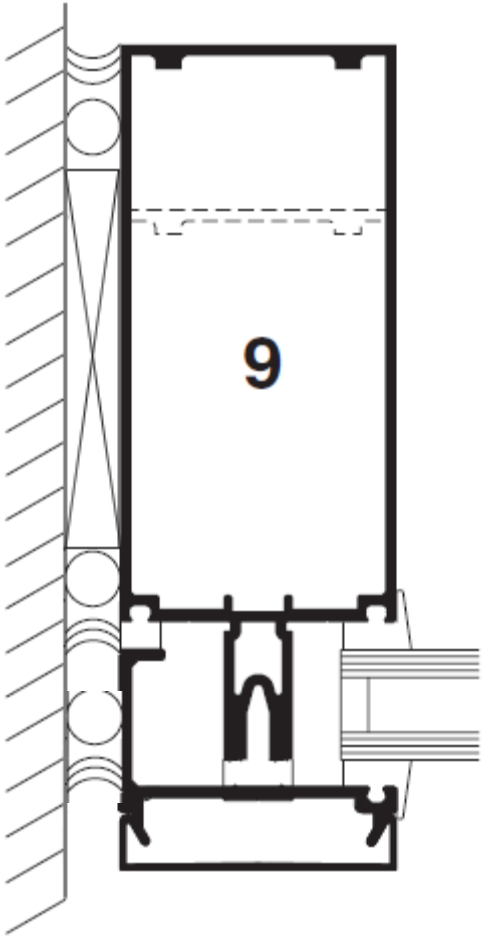

Low Humidity Only

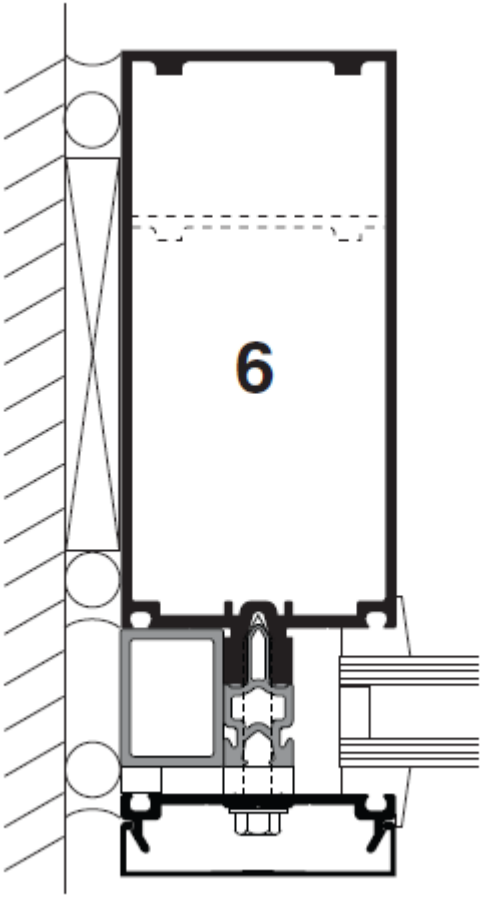

Best For Humidified Environments

Courtesy of Kawneer

Continuity Around the Perimeter

Critical Seals must align at…

- Head
- Jamb
- Sill

Curtain Wall at Sill

Limitations

- Thermal Performance at sill
- Constructability

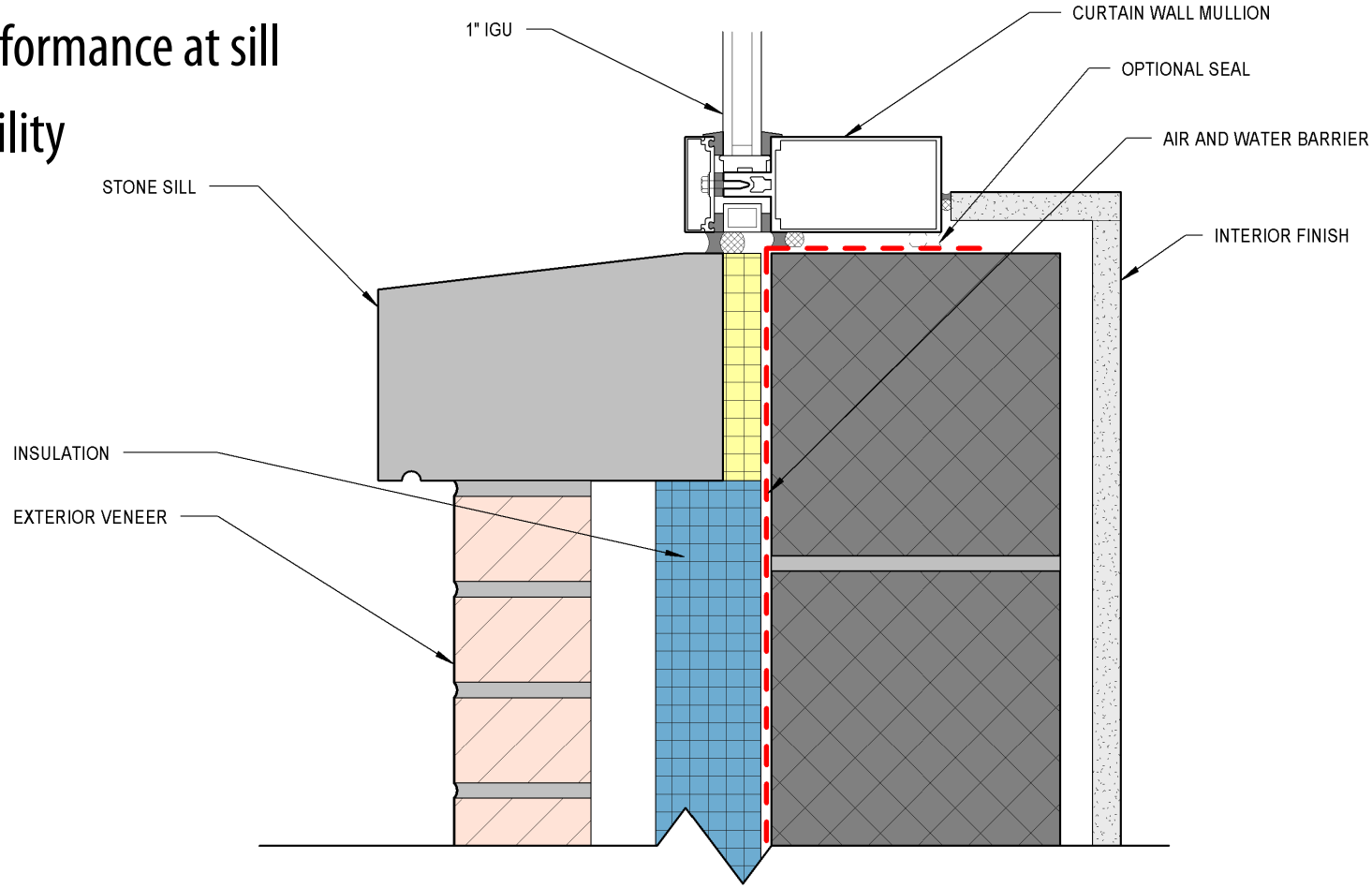

Curtain Wall at Sill (alt1)

Enhanced Thermal Performance

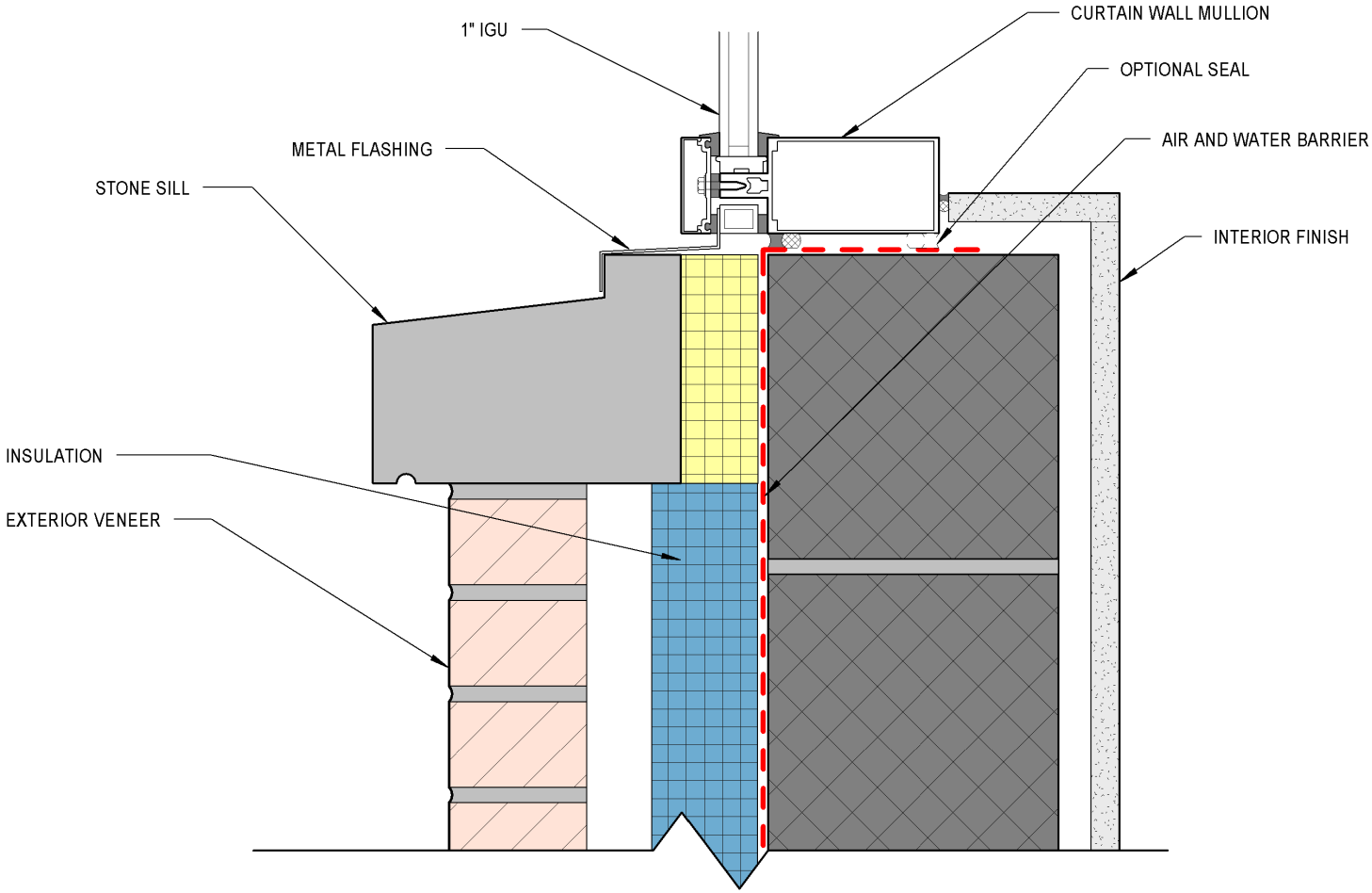

Curtain Wall at Sill (alt2)

Enhanced Thermal Performance

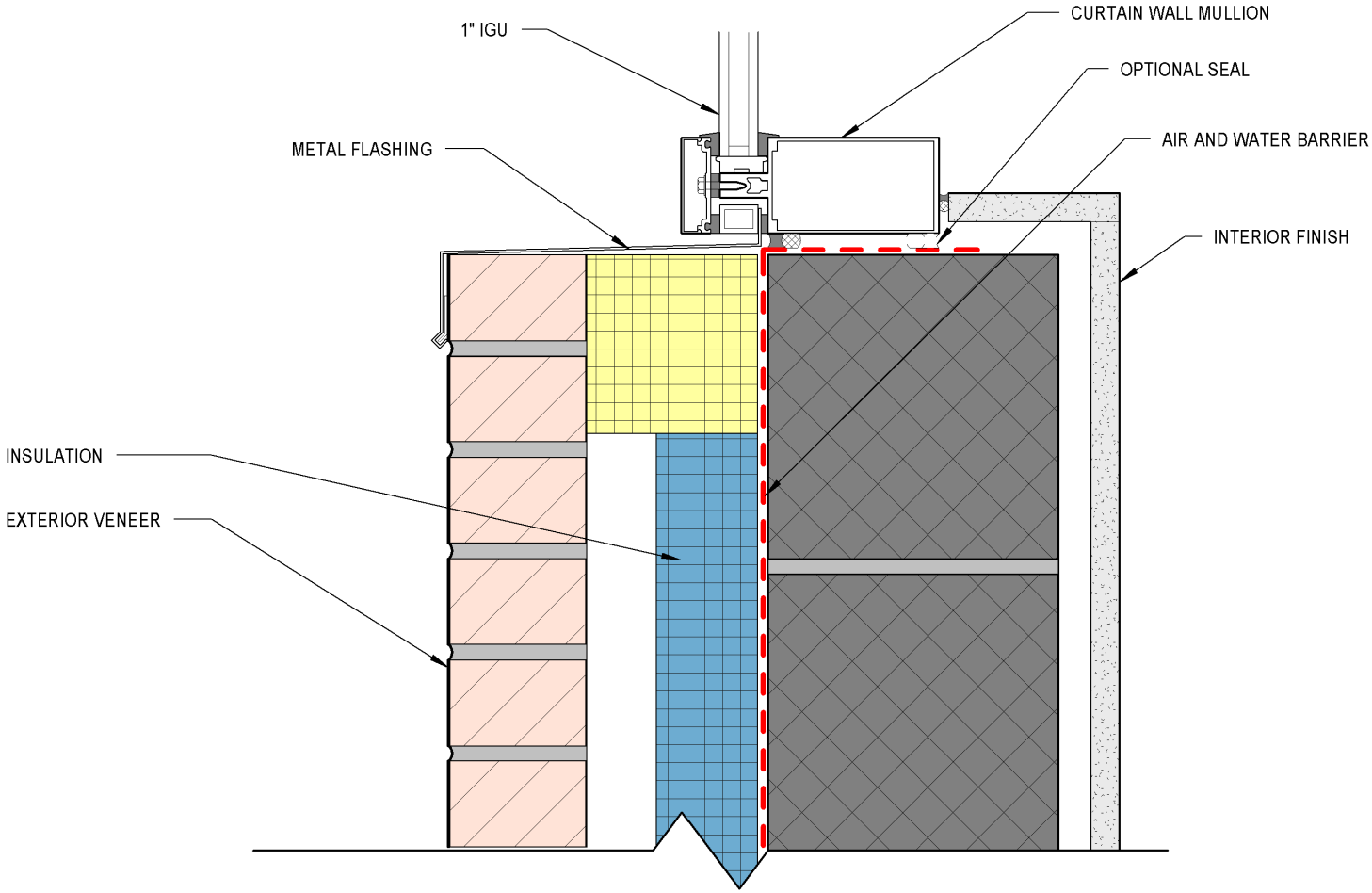

Curtain Wall at Sill – Poor Detail

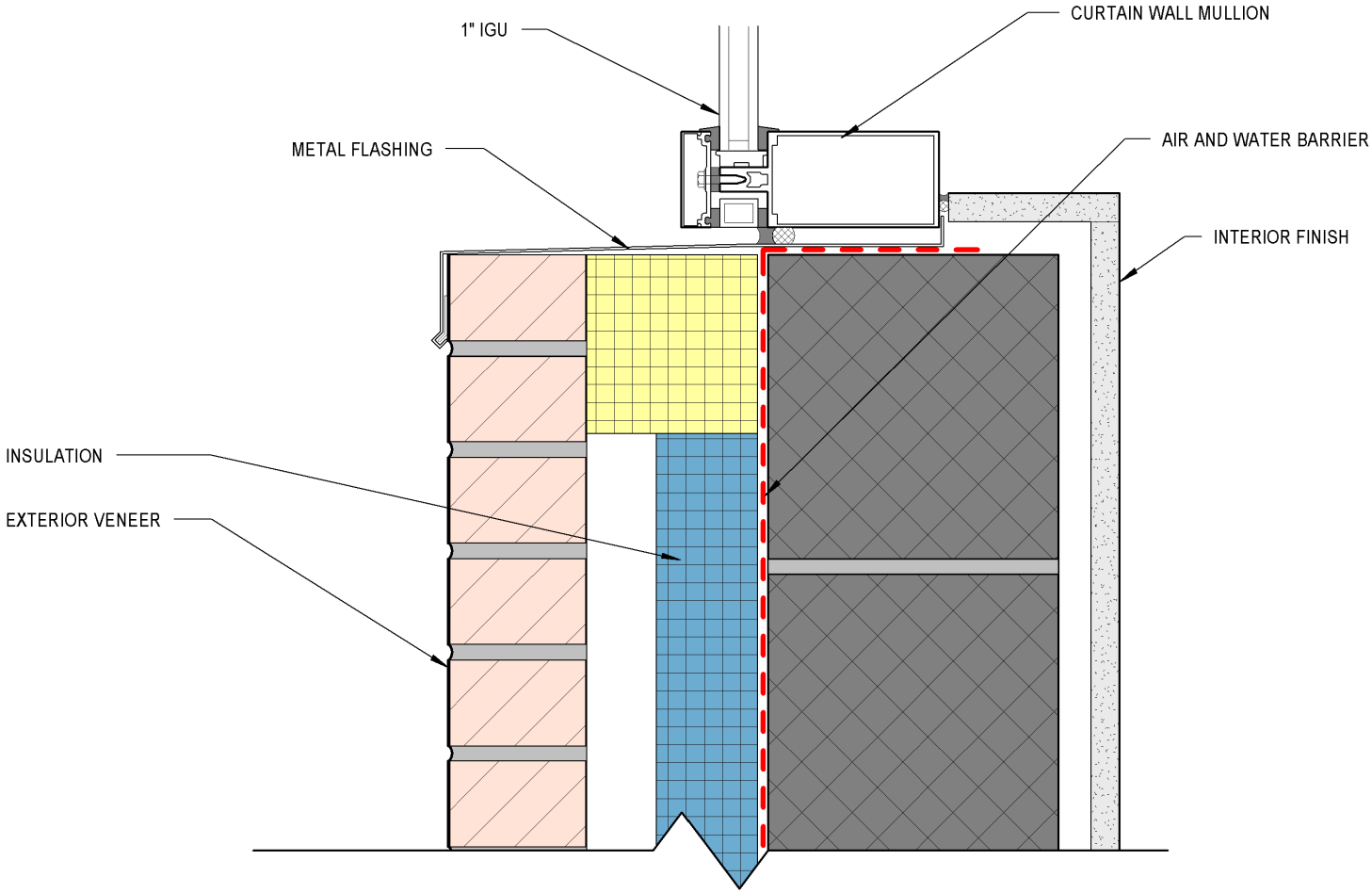

Curtain Wall at Sill – Poor Detail

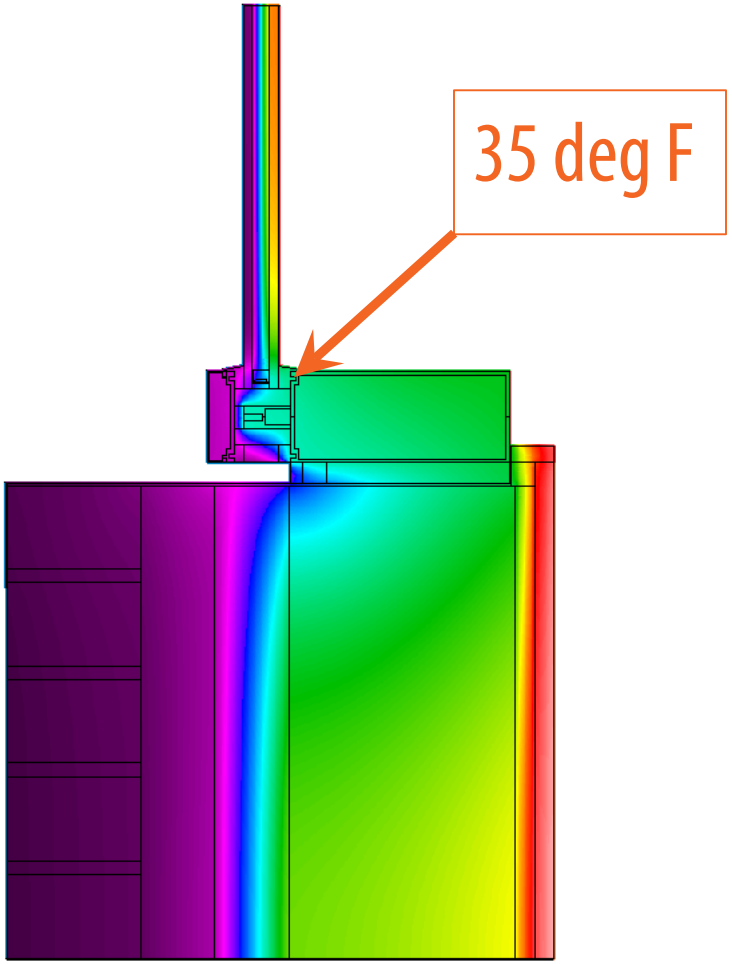

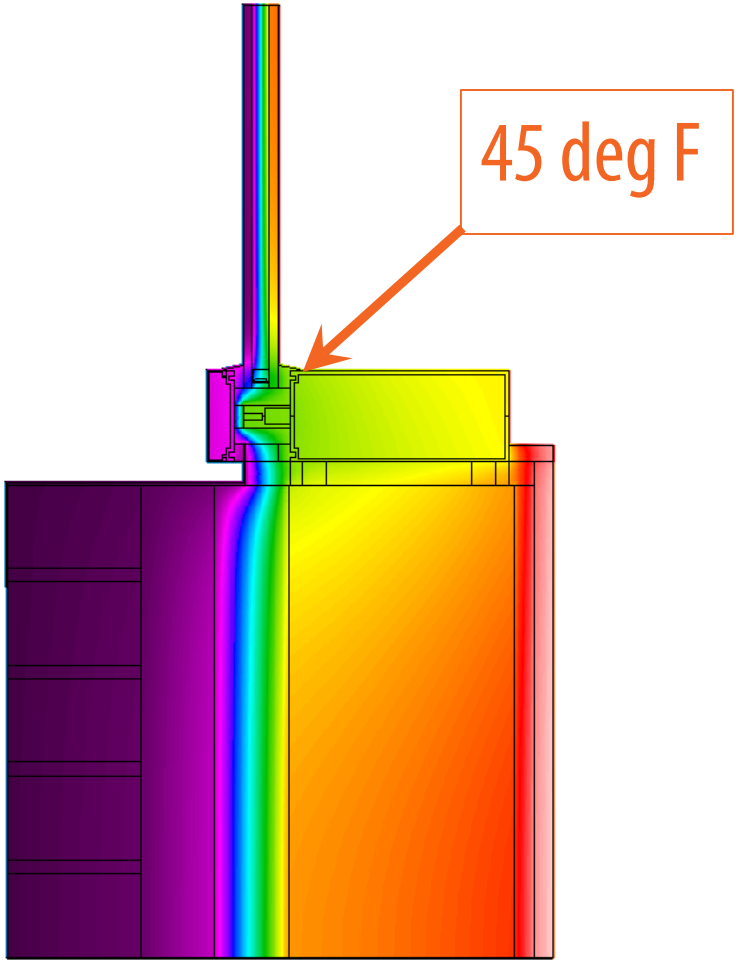

Curtain Wall at Head

Limited Thermal Performance

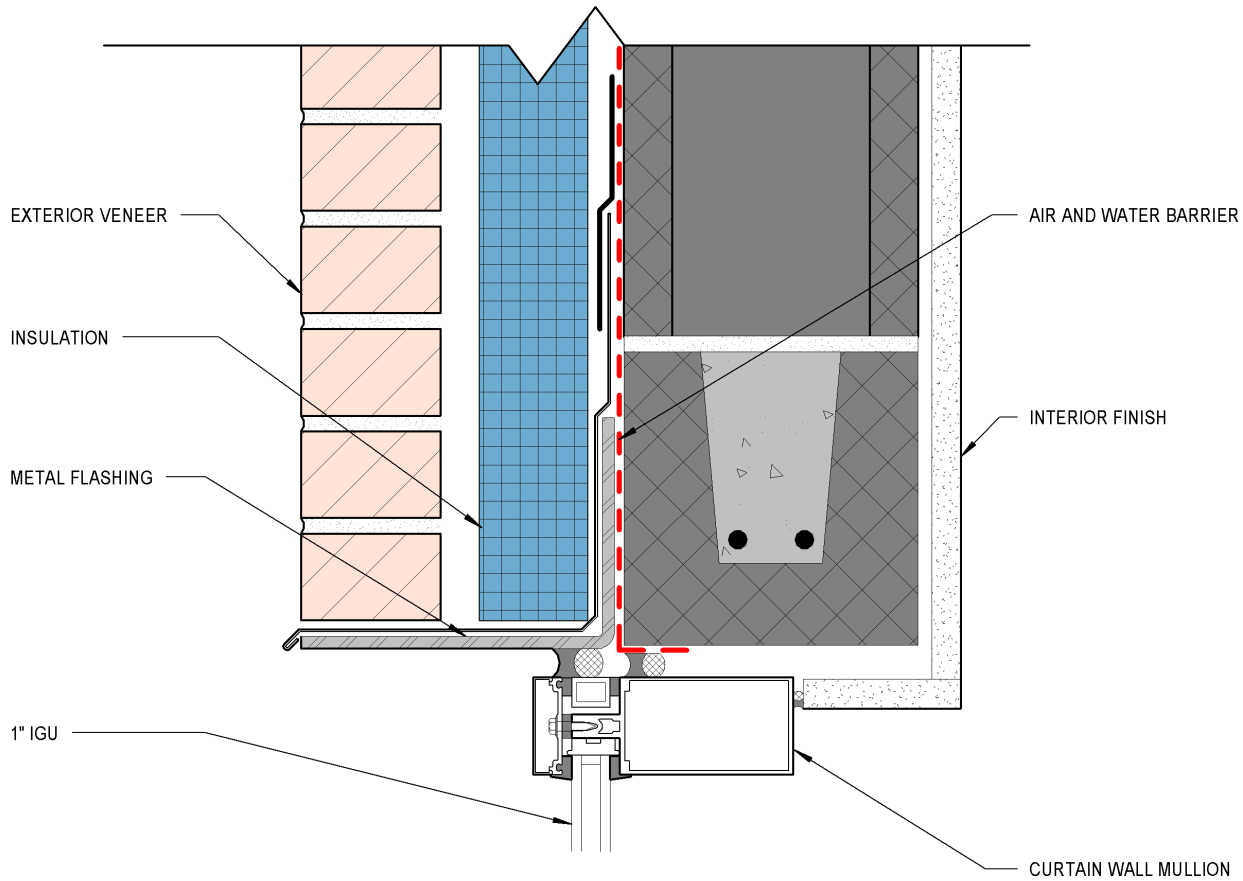

Curtain Wall at Head

Enhanced Thermal Performance

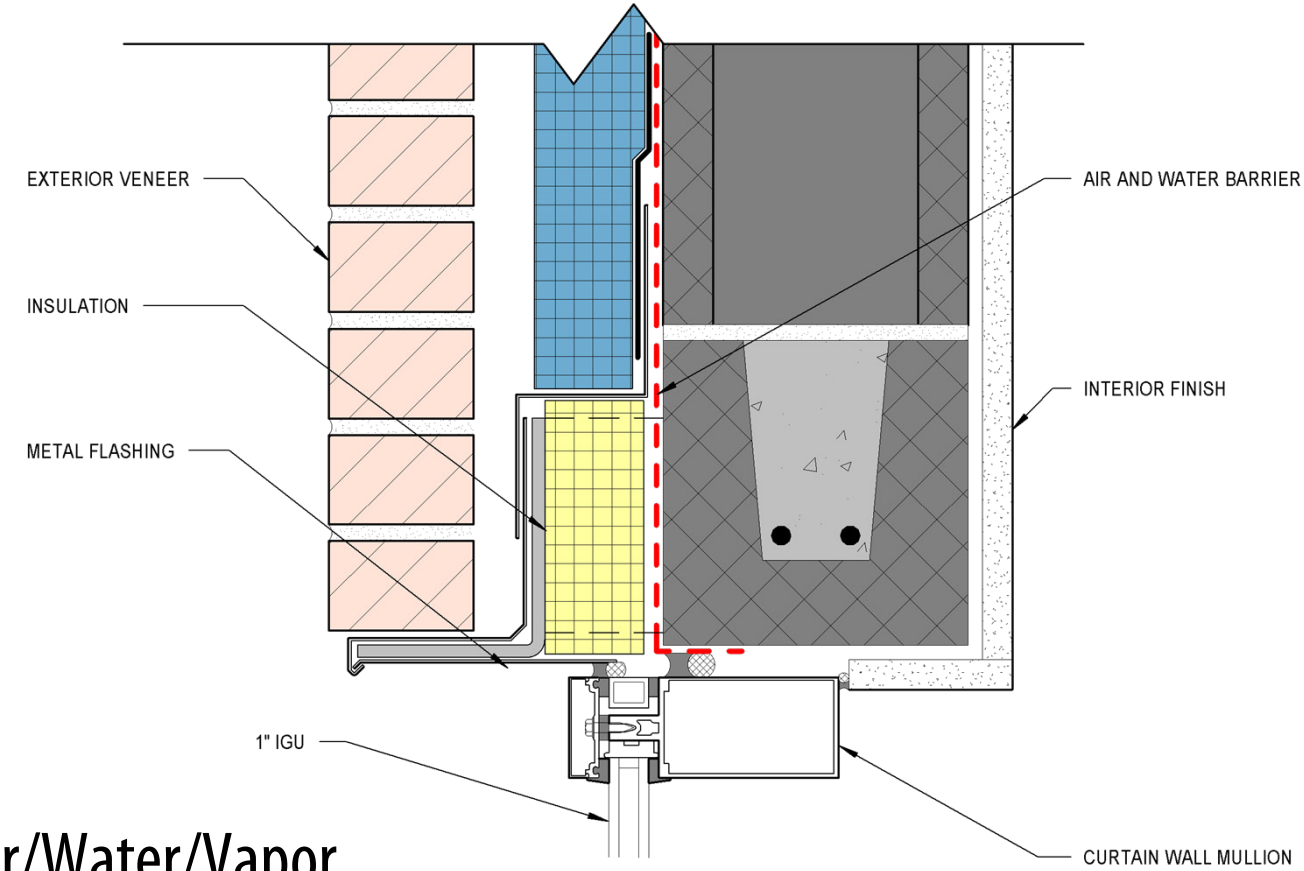

Limitations

- Detailing of Air/Water/Vapor Barrier around clips

Curtain Wall at Head - Comparison

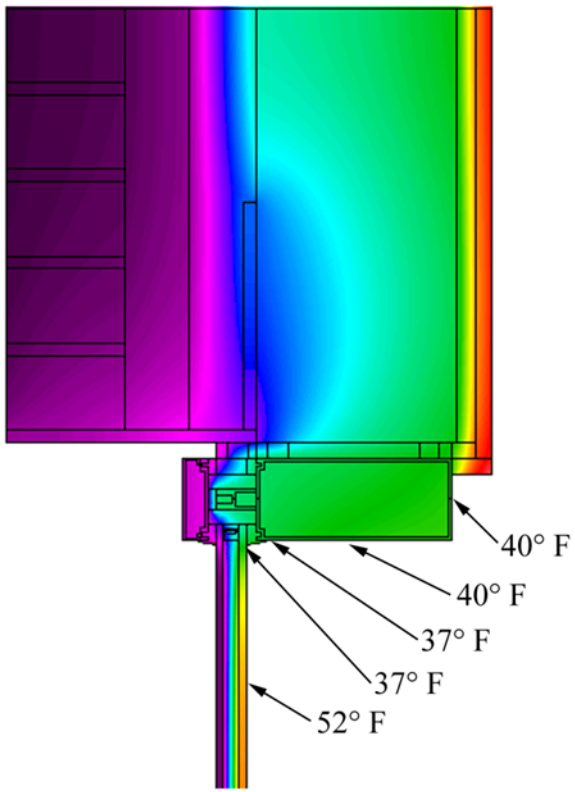

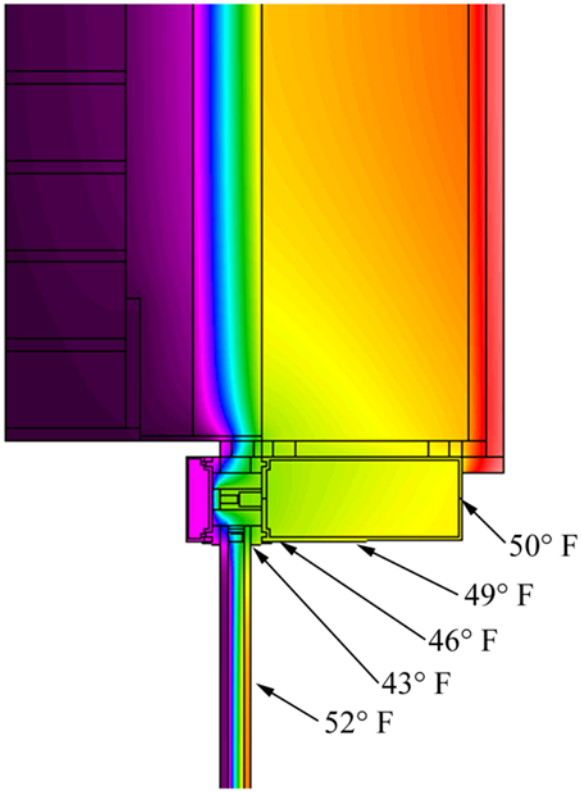

System Installed at Typical Lintel Condition
- Head Condtion at Transition between Brick Cavity Wall and Enhanced Glazed Wall System

System Installed at Thermally Broken Lintel Condition
- Head Condition at Transition between Brick Cavity Wall and Enhanced Glazed Wall System

Exterior Air Temperature = 0° F

Interior Air Temperature = 70° F

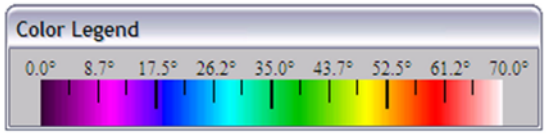

Thermally Broken Head Detail

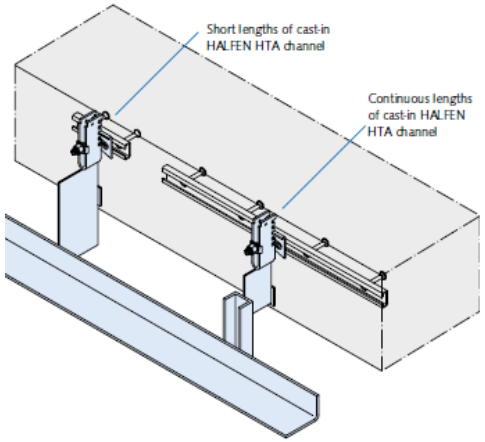

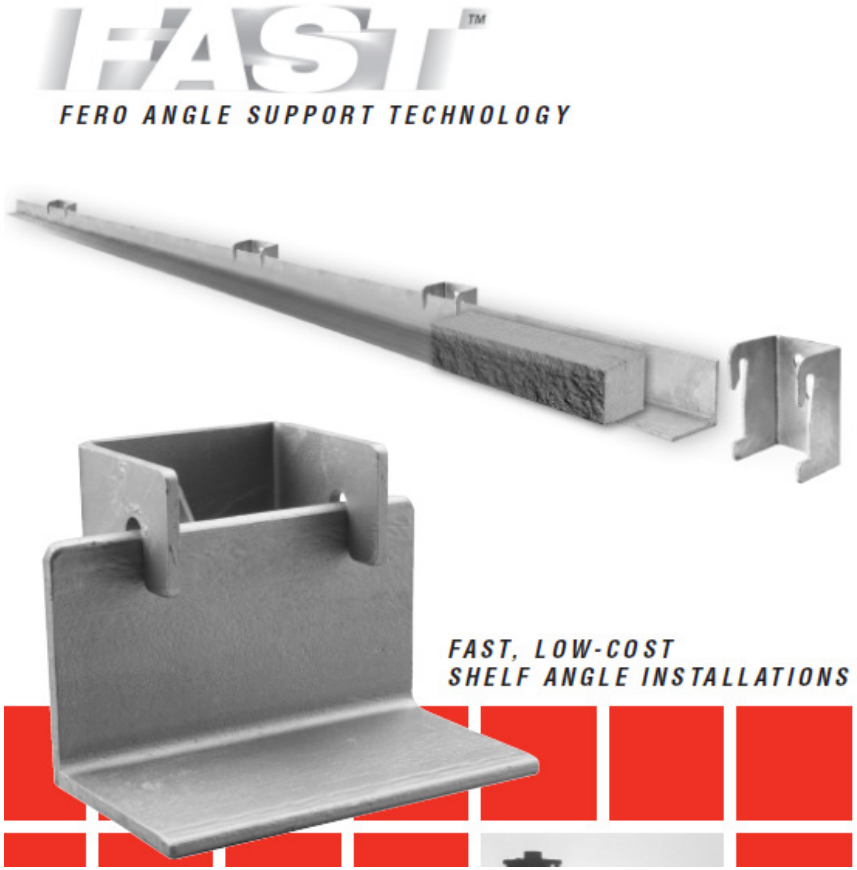

Thermally Broken Head Detail

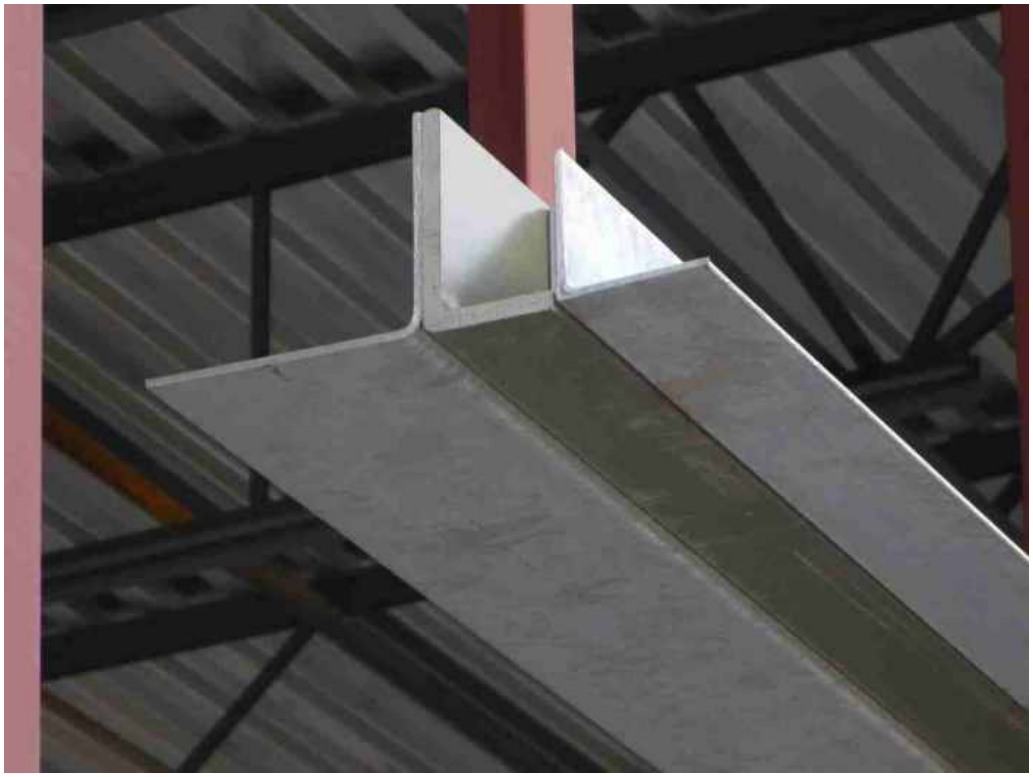

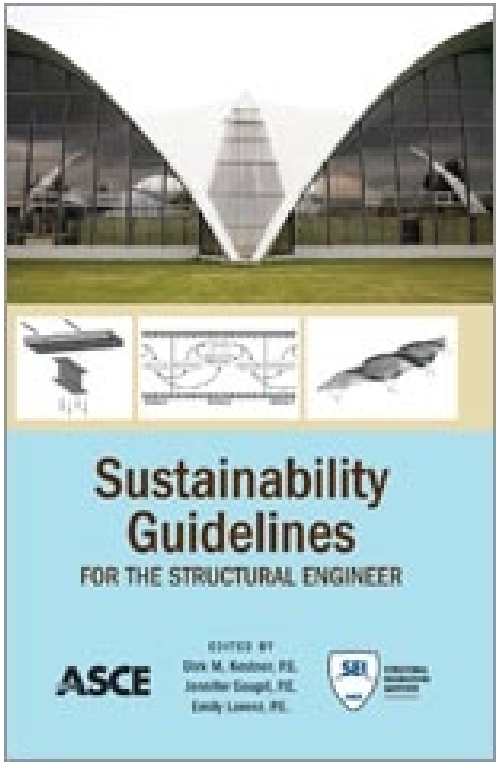

Image Courtesy of James D'Aloisio

Thermally Broken Head Detail

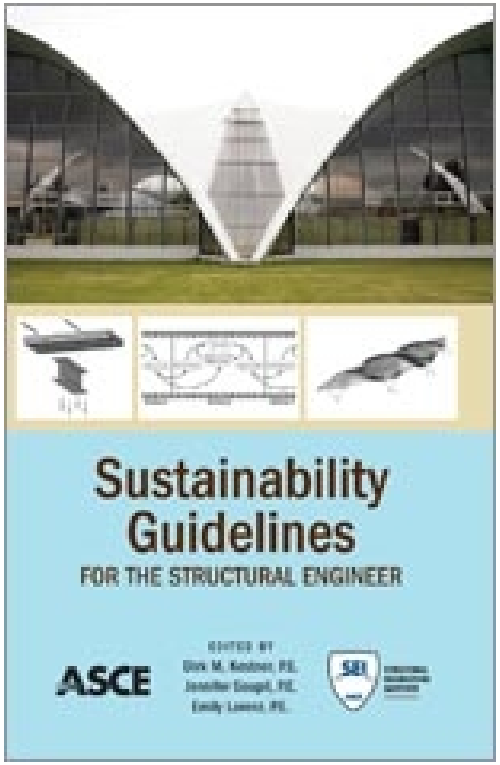

Image Courtesy of James D'Aloisio

Curtain Wall at Head – Poor Detail

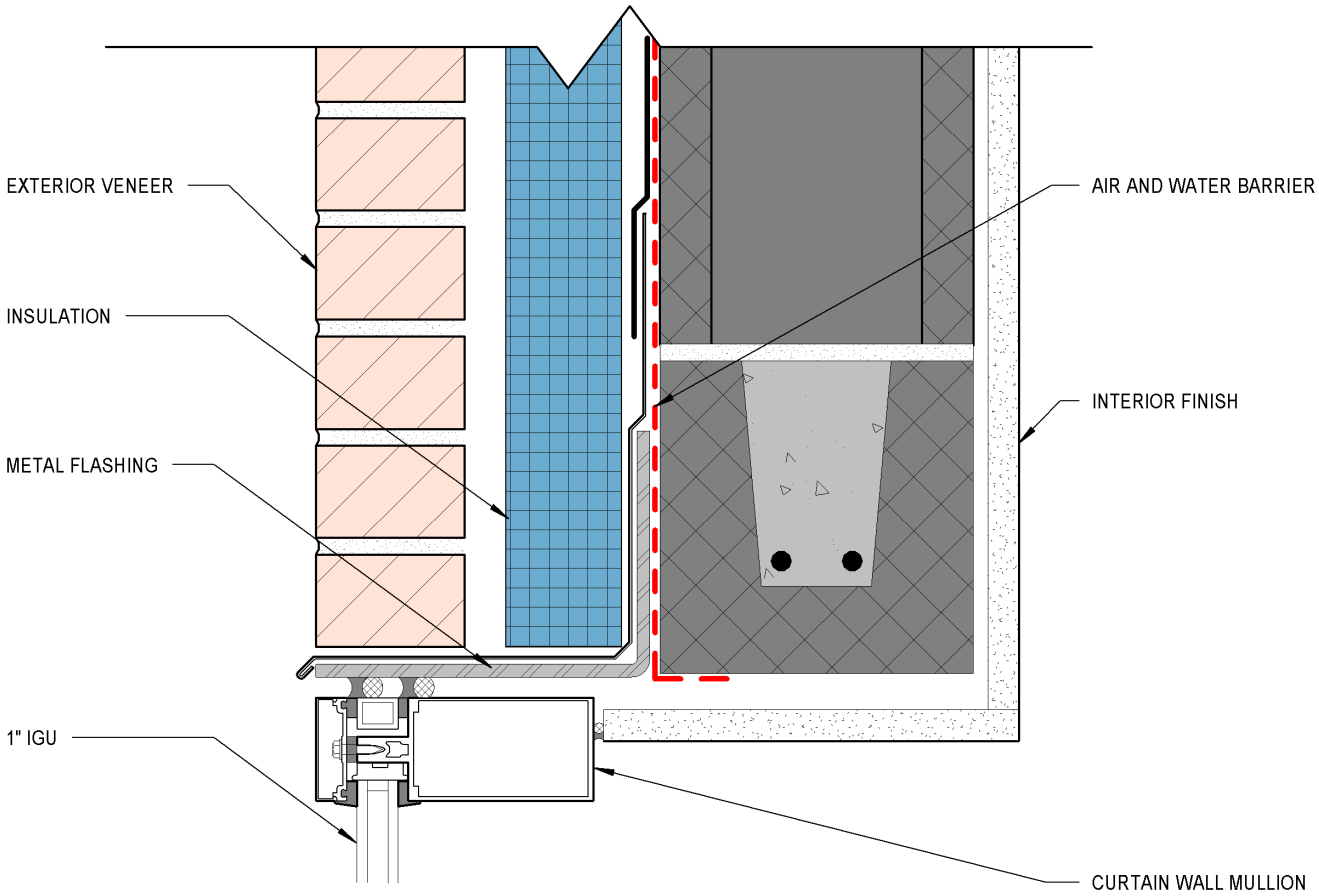

Curtain Wall at Head – Poor Detail

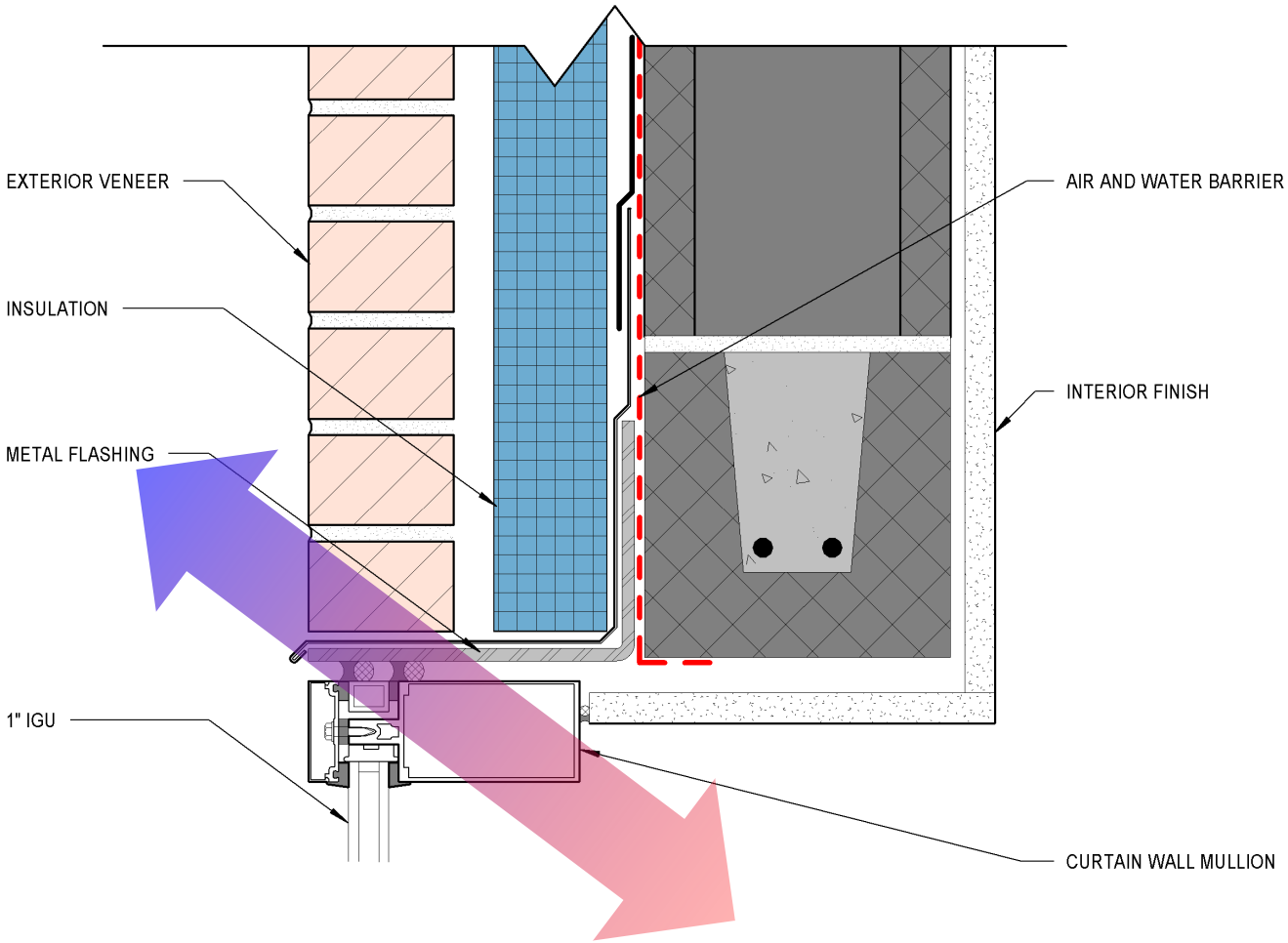

Curtain Wall at Head – Poor Detail

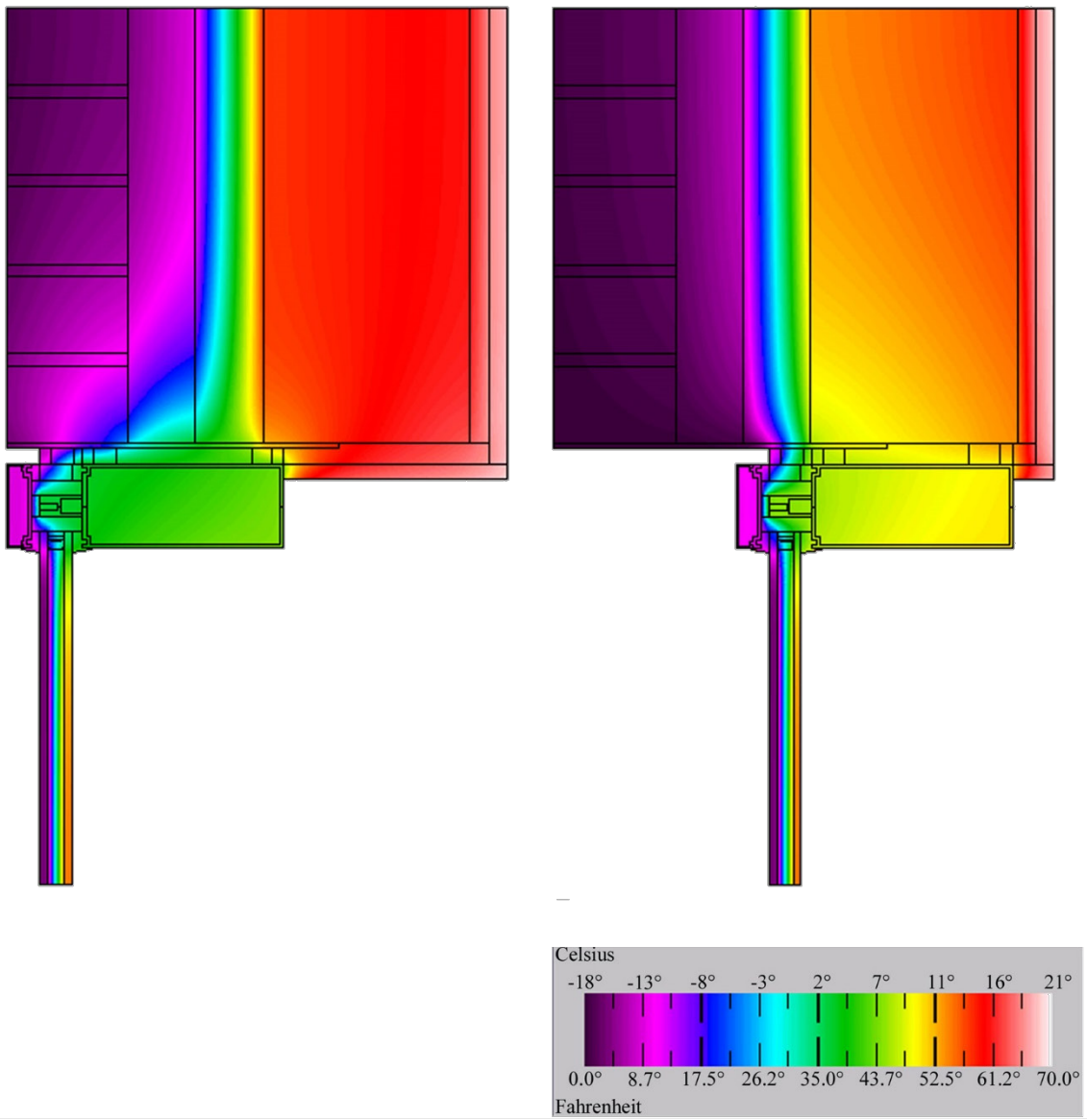

Roof / Wall Transition

Parapet Methods

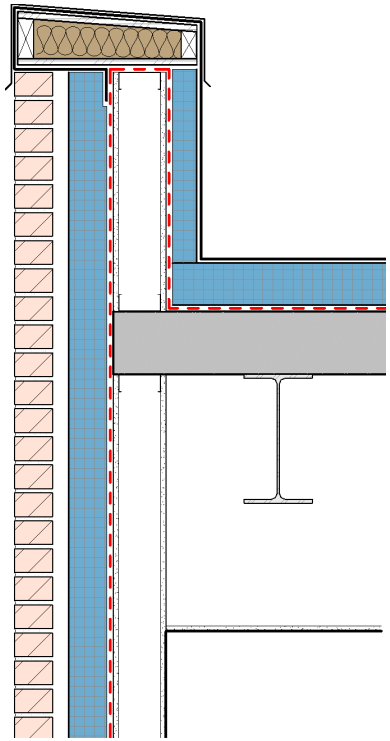

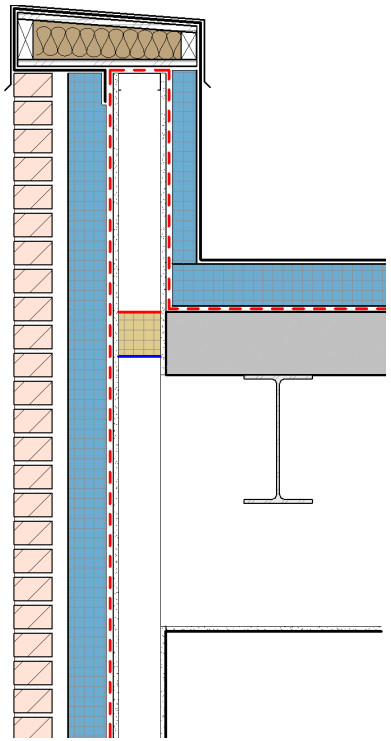

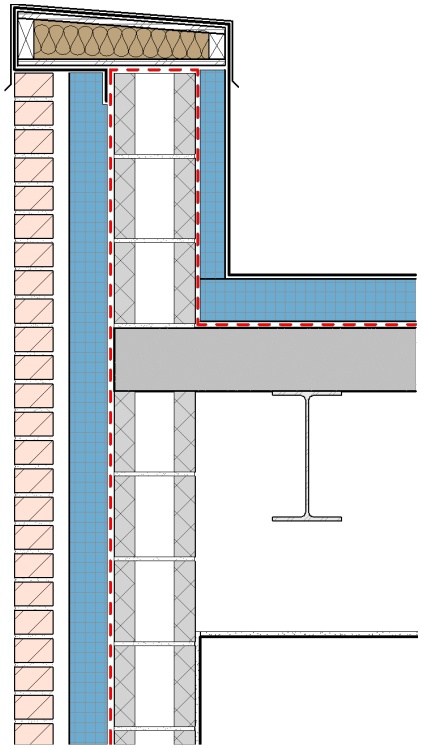

WATER

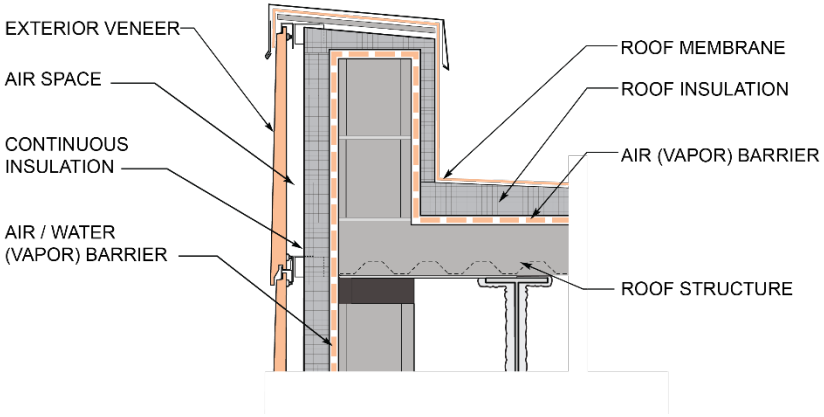

AIR

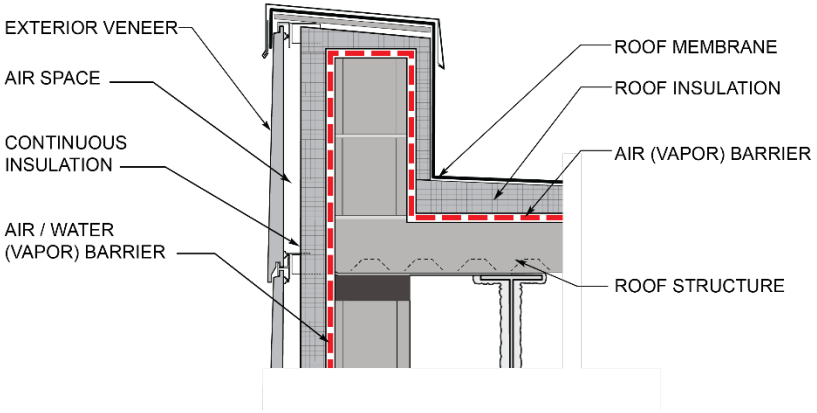

THERMAL

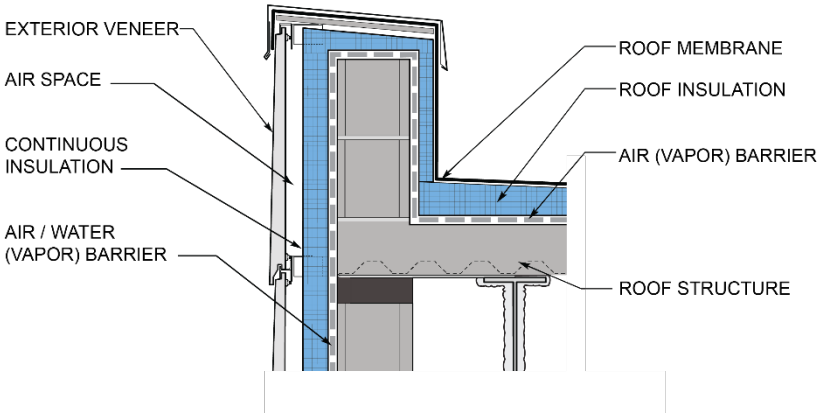

VAPOR

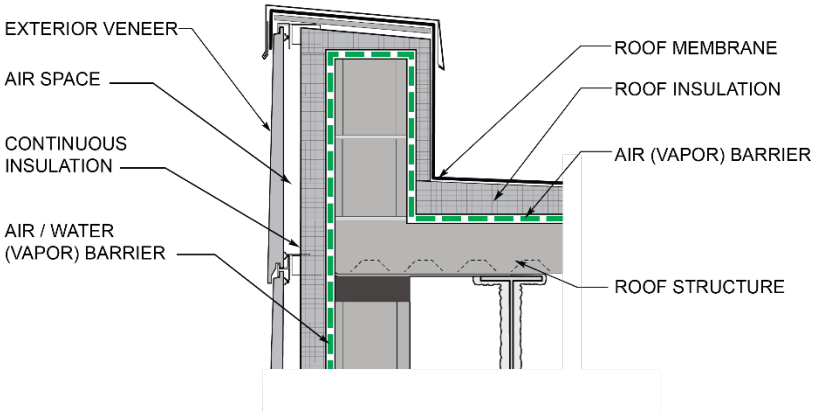

Air / Vapor Barrier Continuity Options

Option 1a

Option 1a

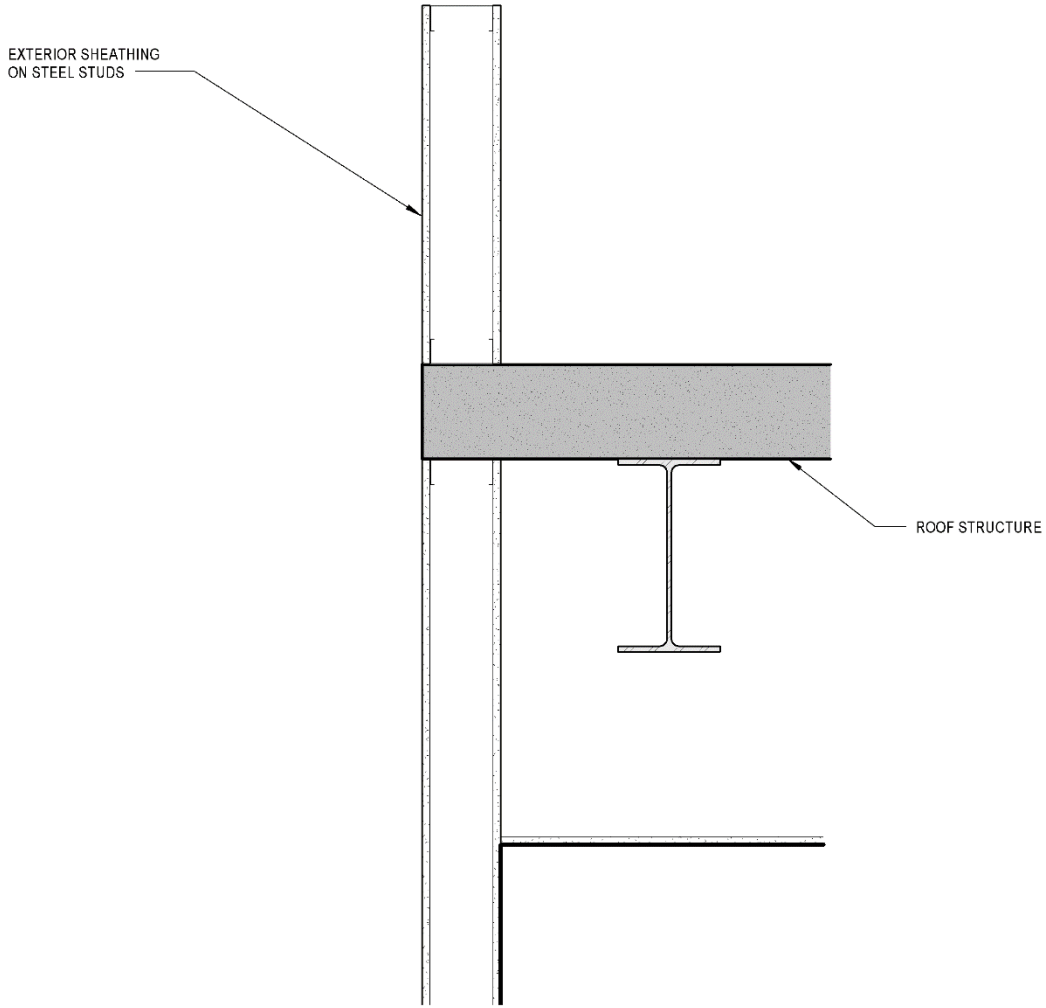

Option 1a

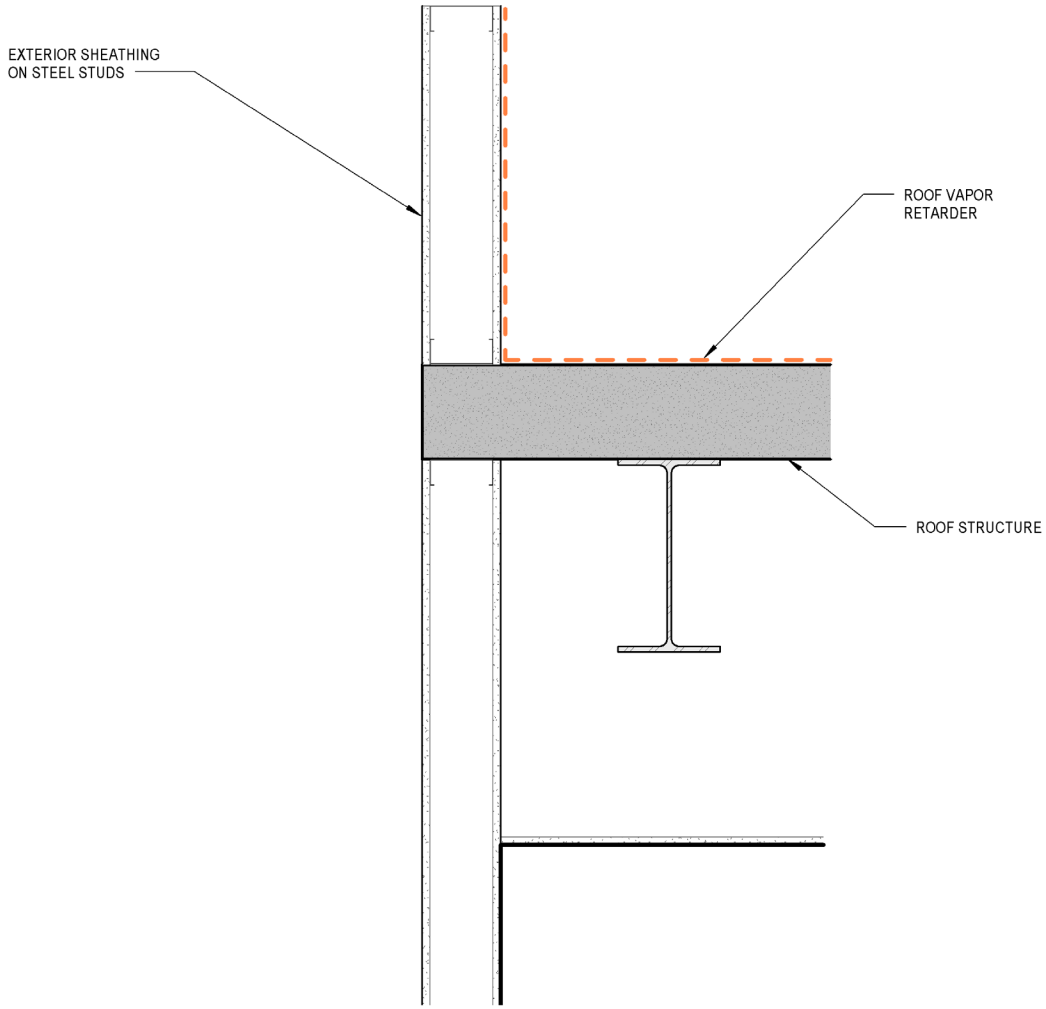
EXTERIOR SHEATHING
ON STEEL STUDS
ROOF VAPOR
RETARDER
ROOF STRUCTURE

Option 1a

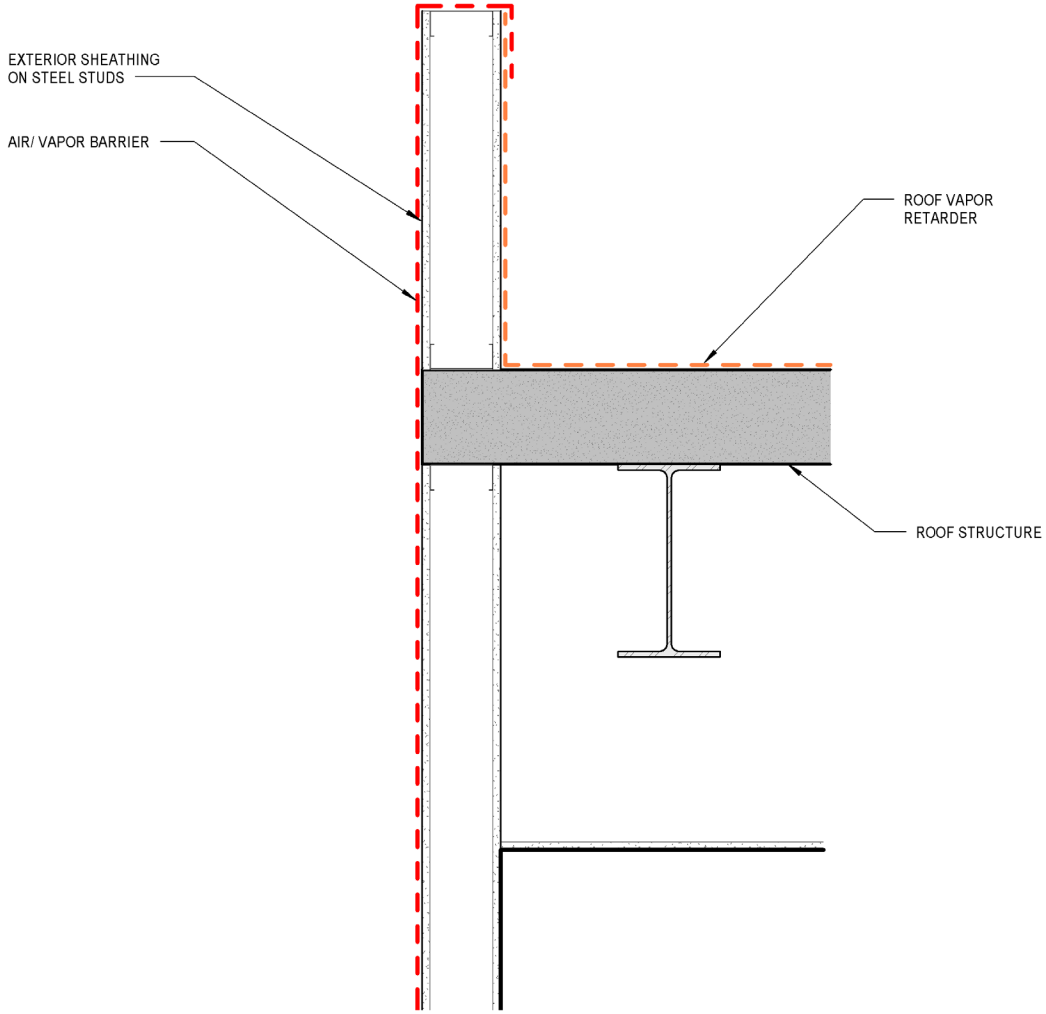
EXTERIOR SHEATHING
ON STEEL STUDS
AIR/ VAPOR BARRIER
ROOF VAPOR
RETARDER
ROOF STRUCTURE

Option 1a

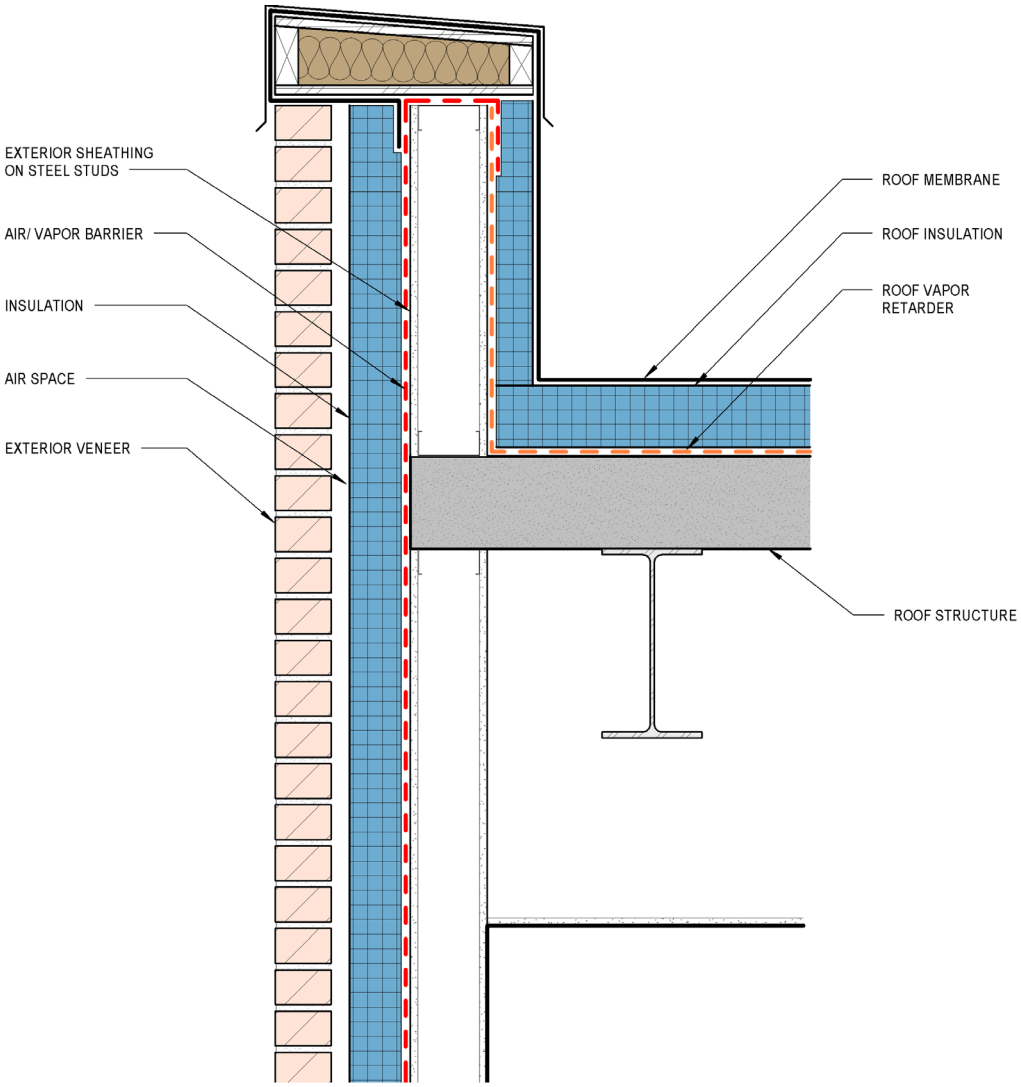
EXTERIOR SHEATHING
ON STEEL STUDS
AIR/ VAPOR BARRIER
INSULATION
AIR SPACE
EXTERIOR VENEER
ROOF MEMBRANE
ROOF INSULATION
ROOF VAPOR
RETARDER
ROOF STRUCTURE

Option 1b

Option 1b

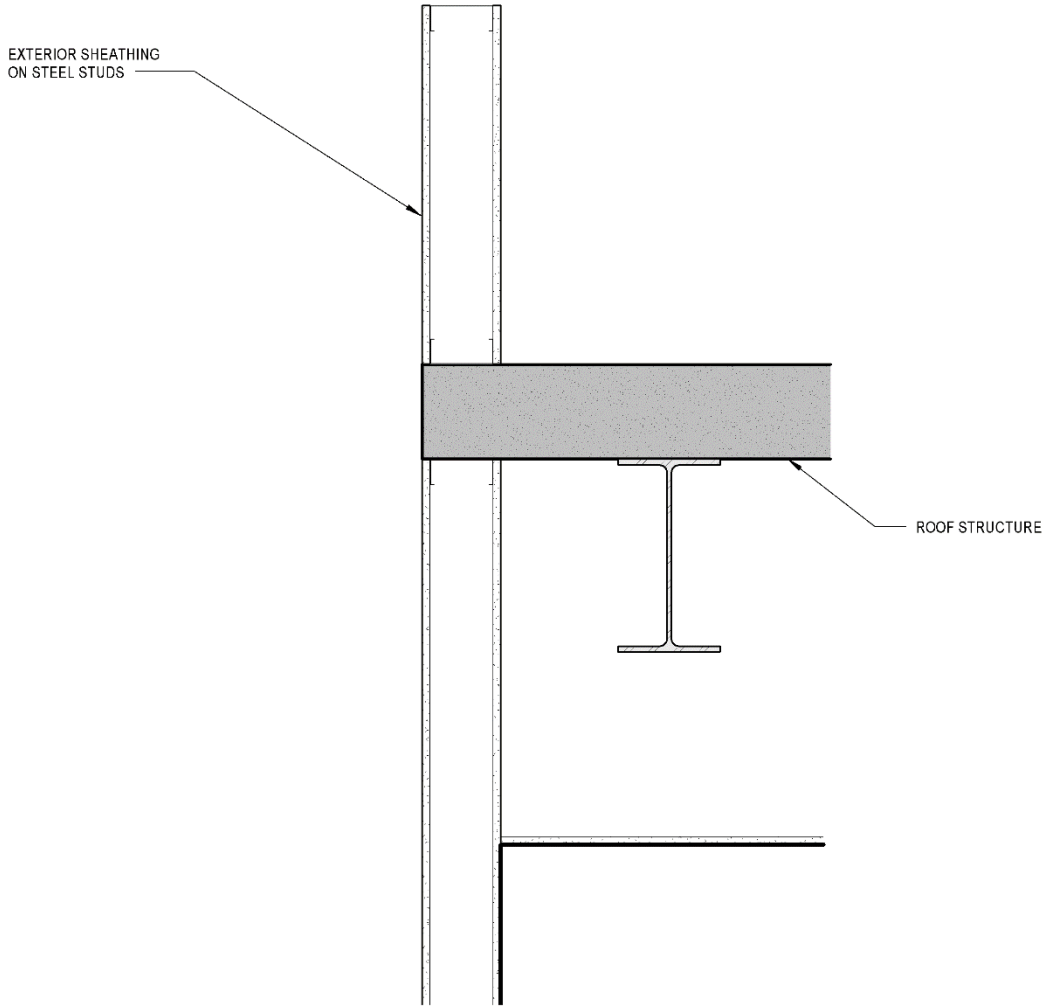

Option 1b

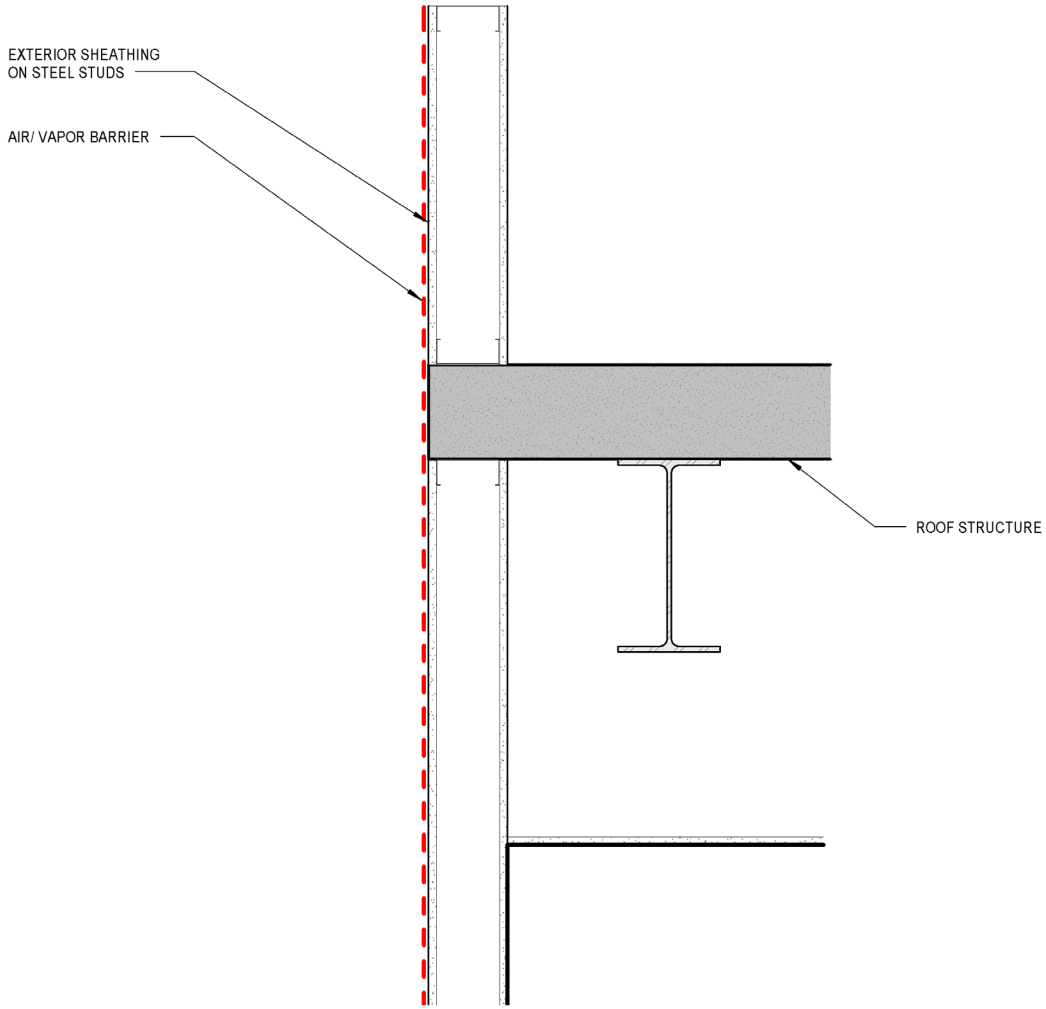
EXTERIOR SHEATHING
ON STEEL STUDS
AIR/ VAPOR BARRIER
ROOF STRUCTURE

Option 1b

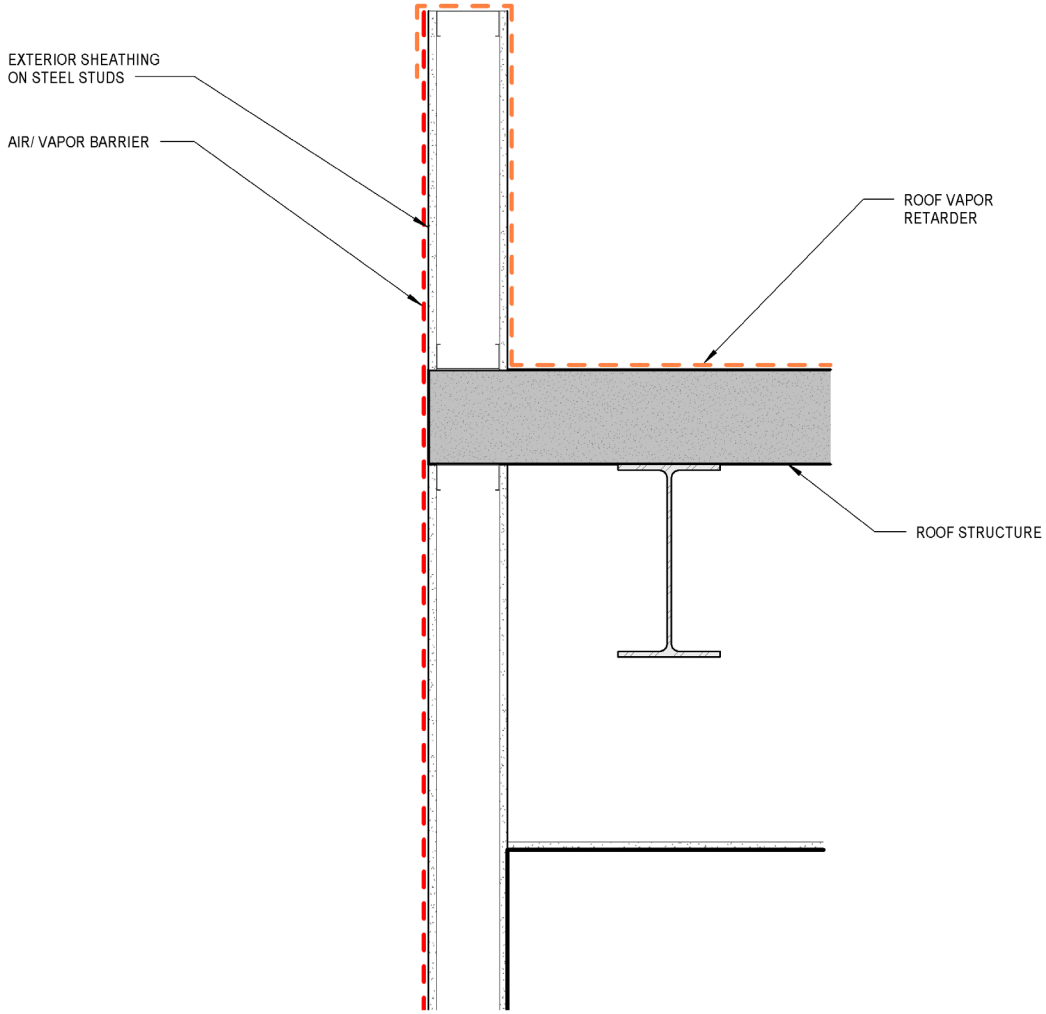
EXTERIOR SHEATHING
ON STEEL STUDS
AIR/ VAPOR BARRIER
ROOF VAPOR
RETARDER
ROOF STRUCTURE

Option 1b

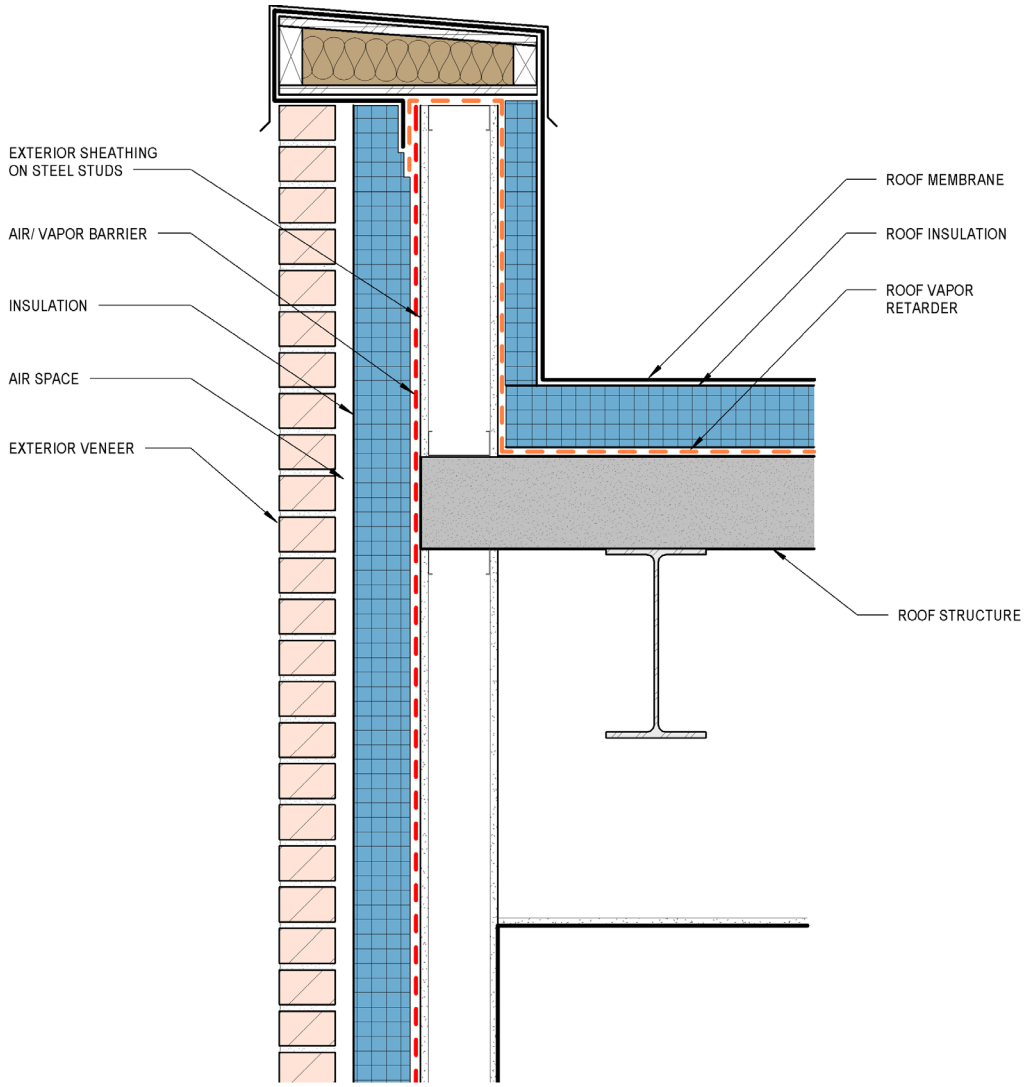
EXTERIOR SHEATHING
ON STEEL STUDS
AIR/ VAPOR BARRIER
INSULATION
AIR SPACE
EXTERIOR VENEER
ROOF MEMBRANE
ROOF INSULATION
ROOF VAPOR
RETARDER
ROOF STRUCTURE

Option 1c

Option 1c

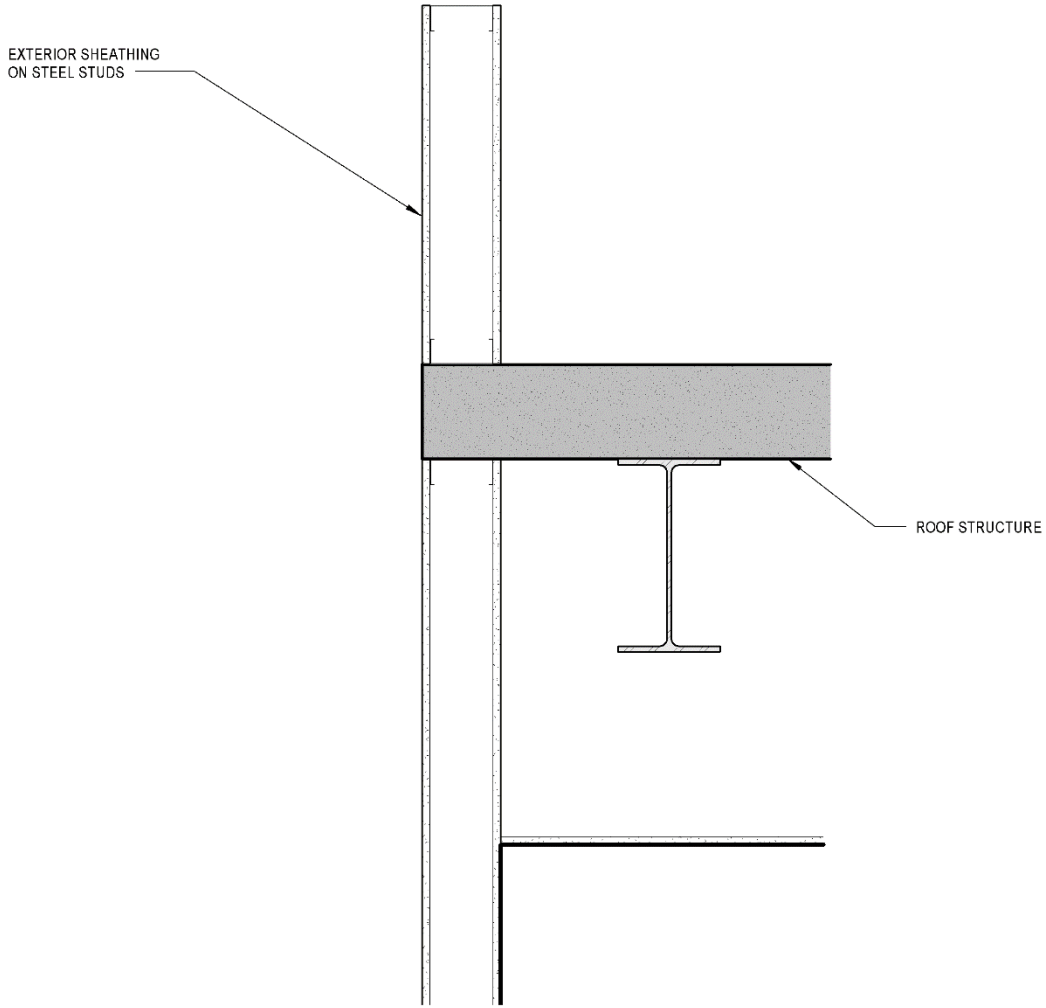

Option 1c

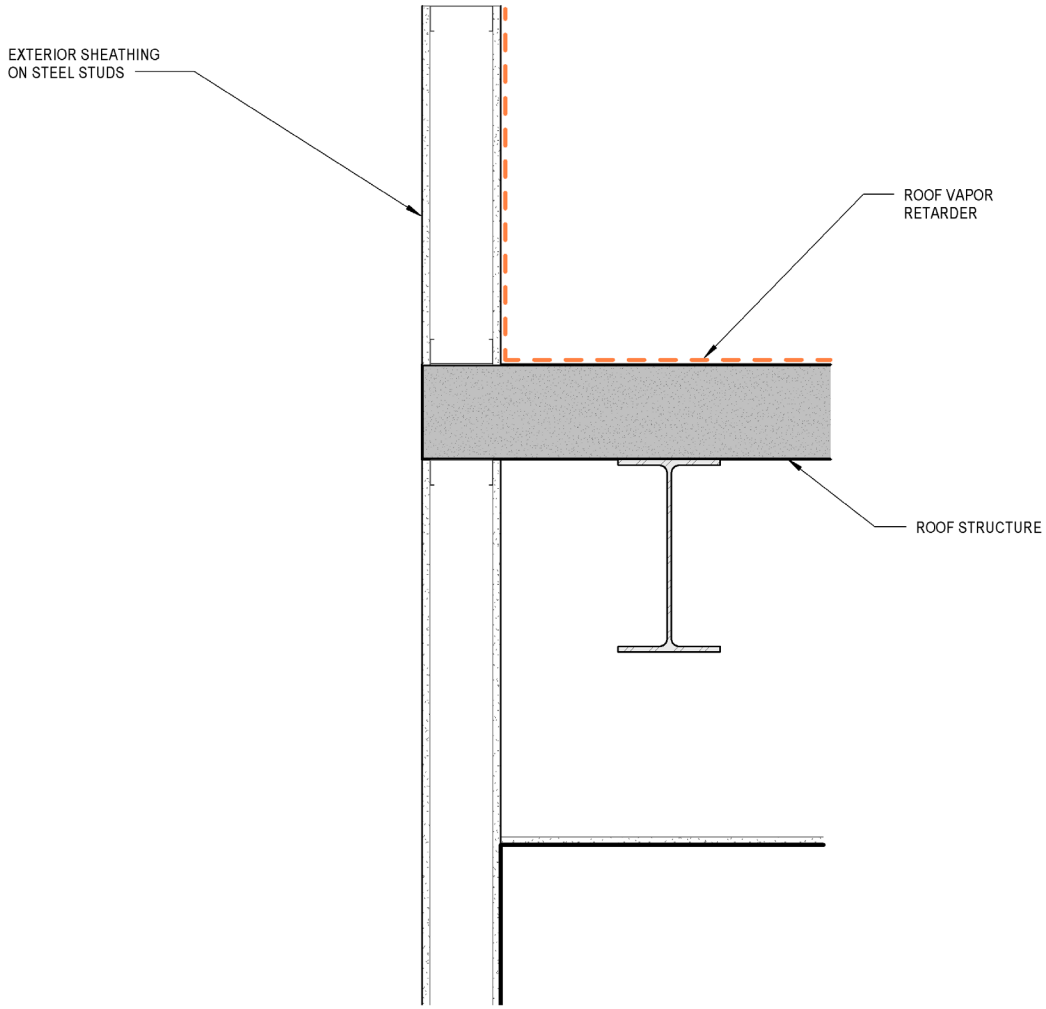
EXTERIOR SHEATHING
ON STEEL STUDS
ROOF VAPOR
RETARDER
ROOF STRUCTURE

Option 1c

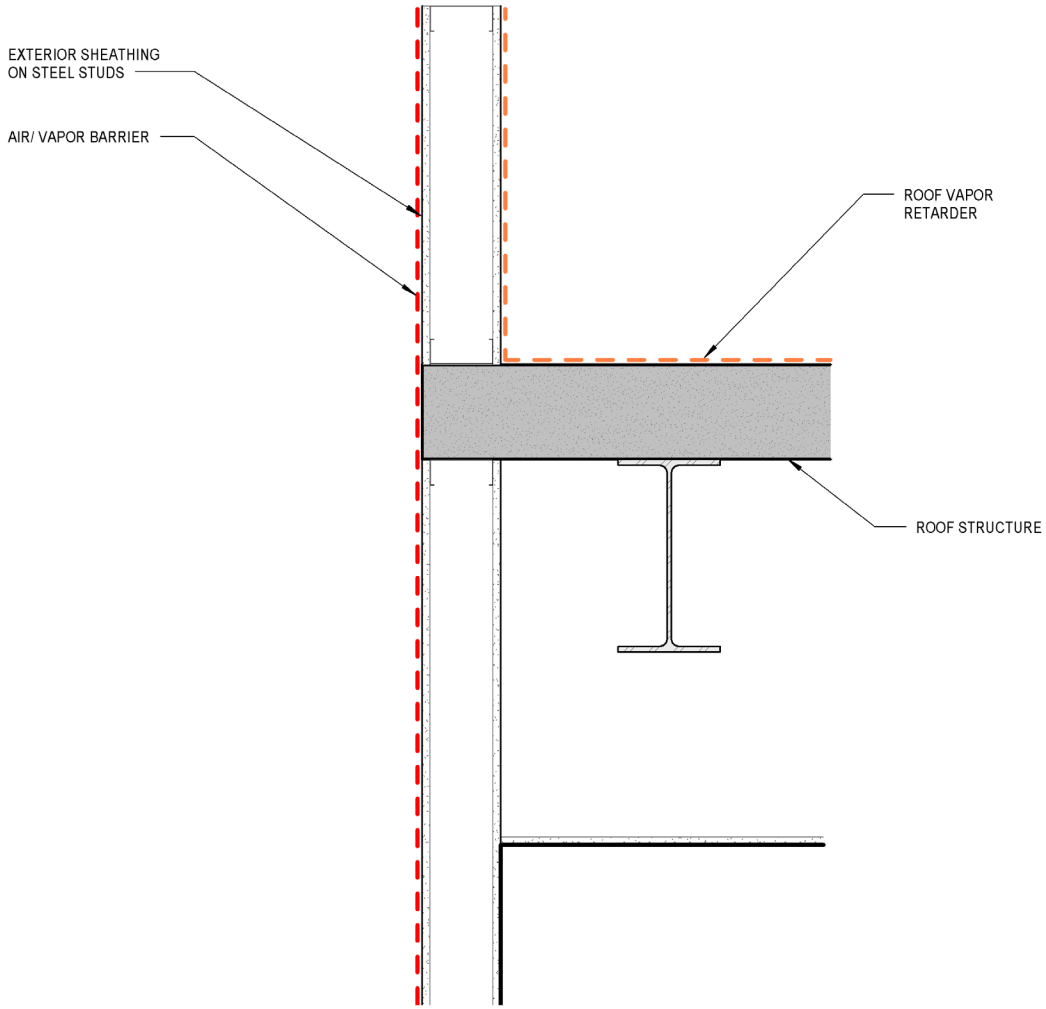
EXTERIOR SHEATHING
ON STEEL STUDS
AIR/ VAPOR BARRIER
ROOF VAPOR
RETARDER
ROOF STRUCTURE

Option 1c

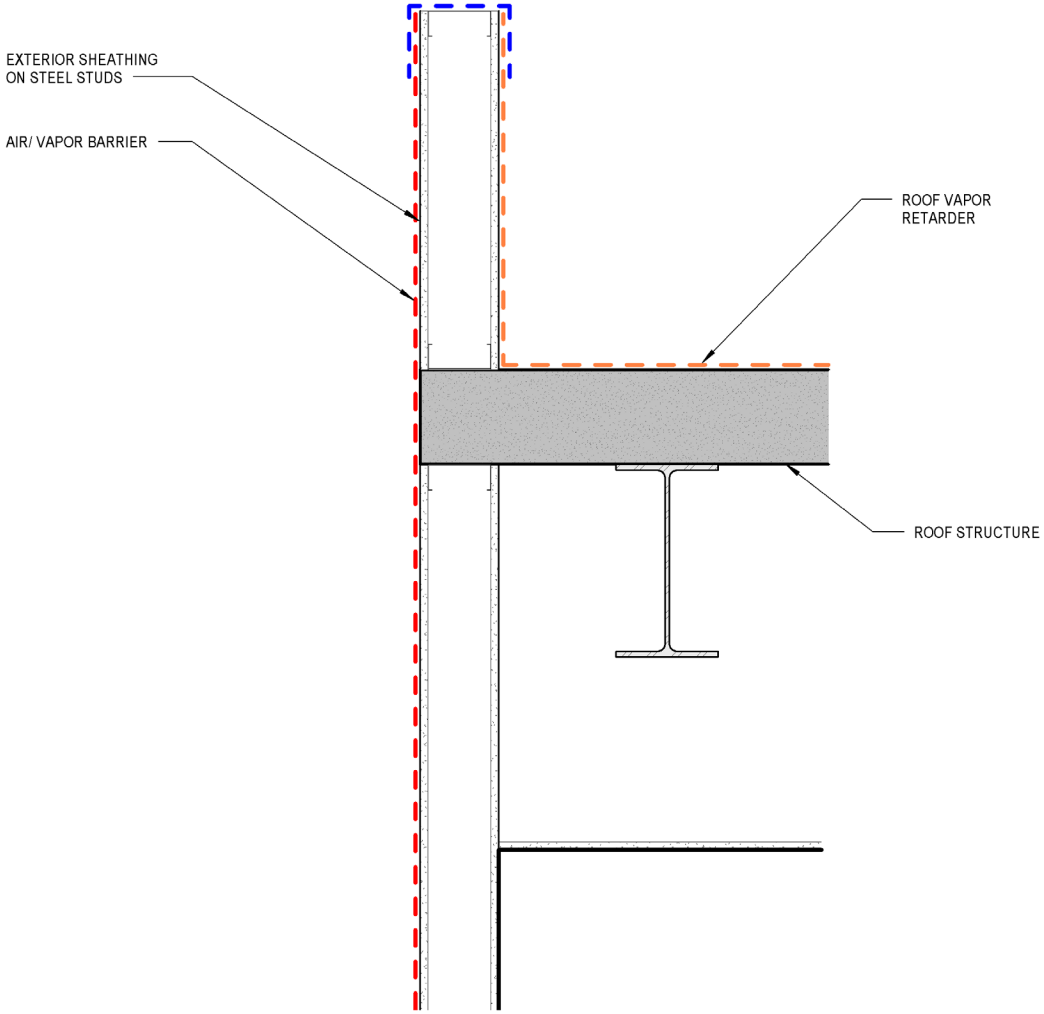
EXTERIOR SHEATHING
ON STEEL STUDS
AIR/ VAPOR BARRIER
ROOF VAPOR
RETARDER
ROOF STRUCTURE

Option 1c

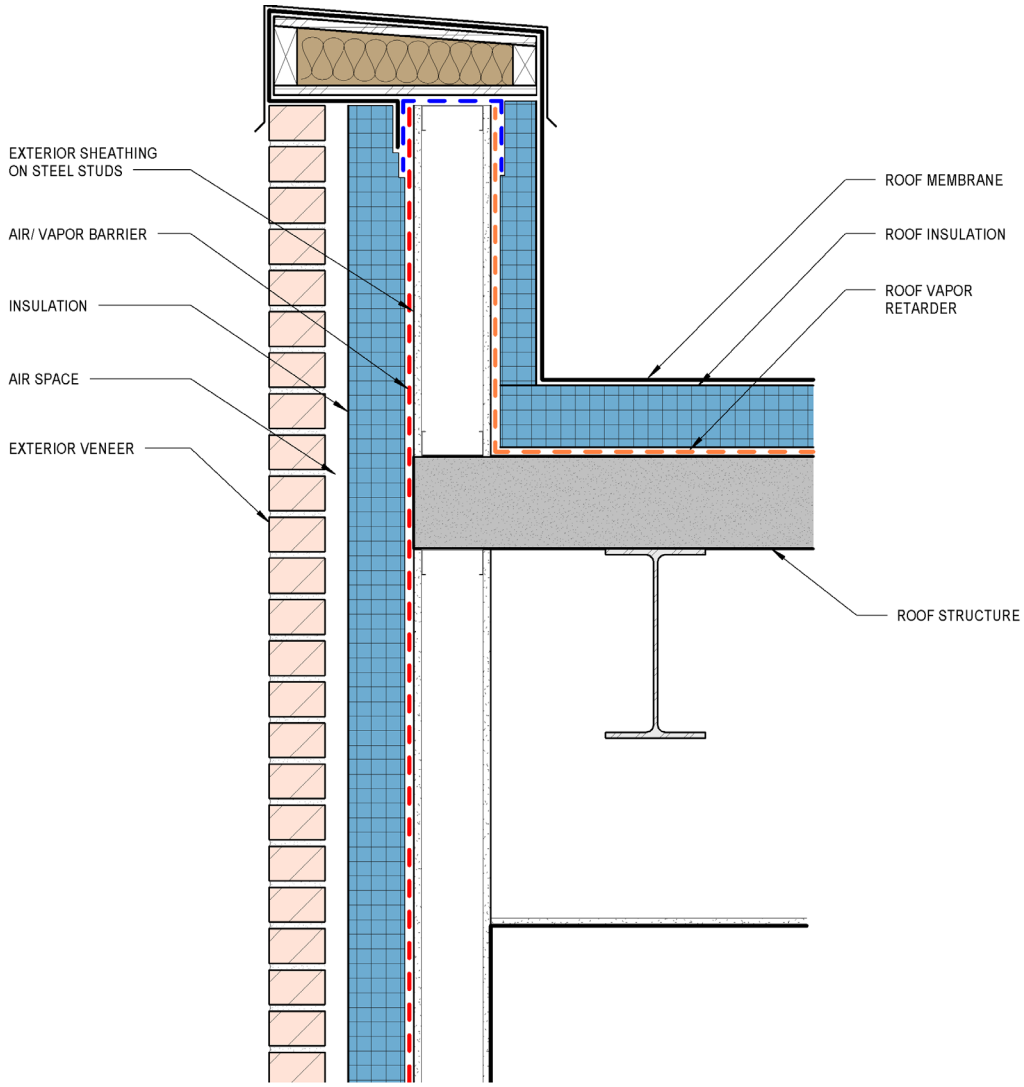
EXTERIOR SHEATHING
ON STEEL STUDS
AIR/ VAPOR BARRIER
INSULATION
AIR SPACE
EXTERIOR VENEER
ROOF MEMBRANE
ROOF INSULATION
ROOF VAPOR
RETARDER
ROOF STRUCTURE

So Which One Do You Use?

Condensation / Thermal Concern

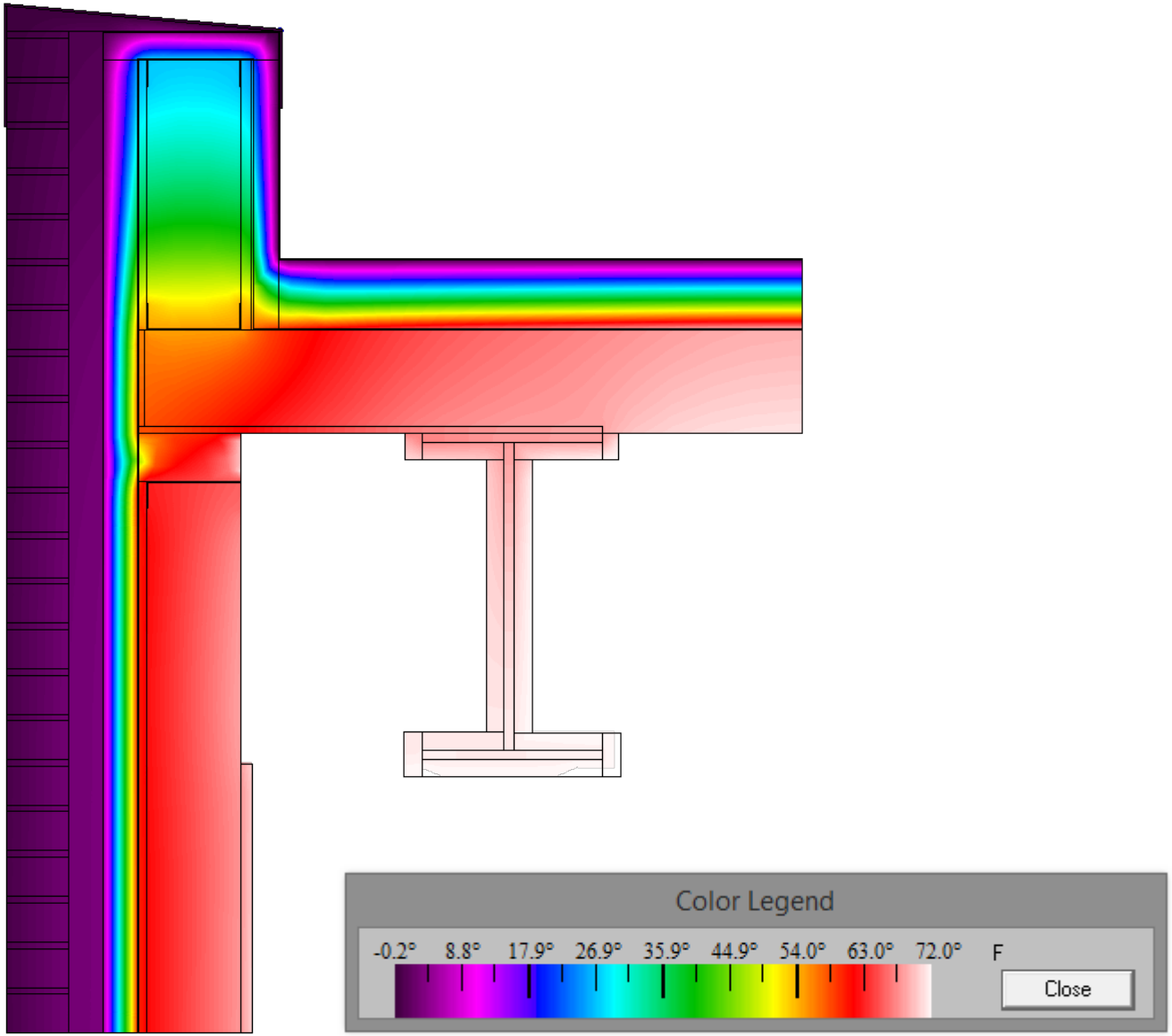

Option 2 (humidified interior environment)

Option 2 (humidified interior environment)

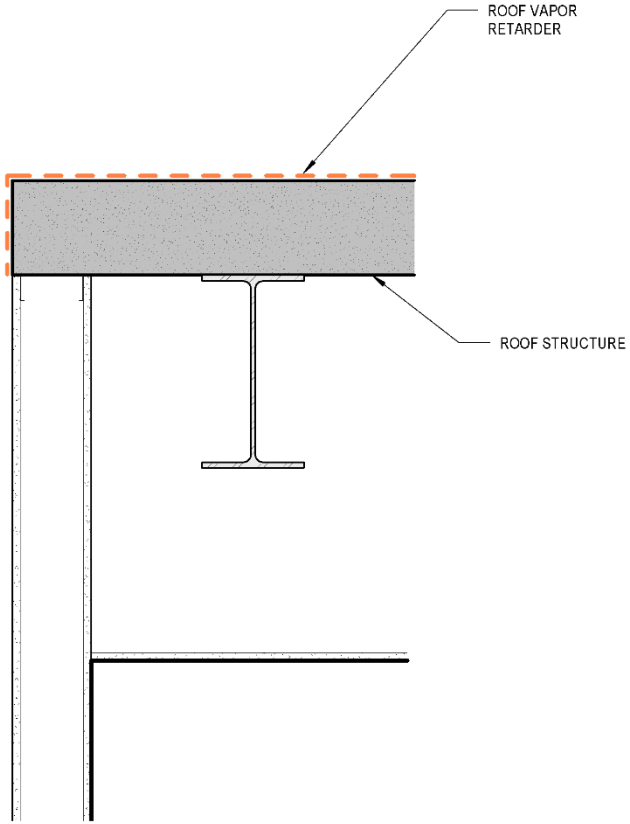

Option 2 (humidified interior environment)

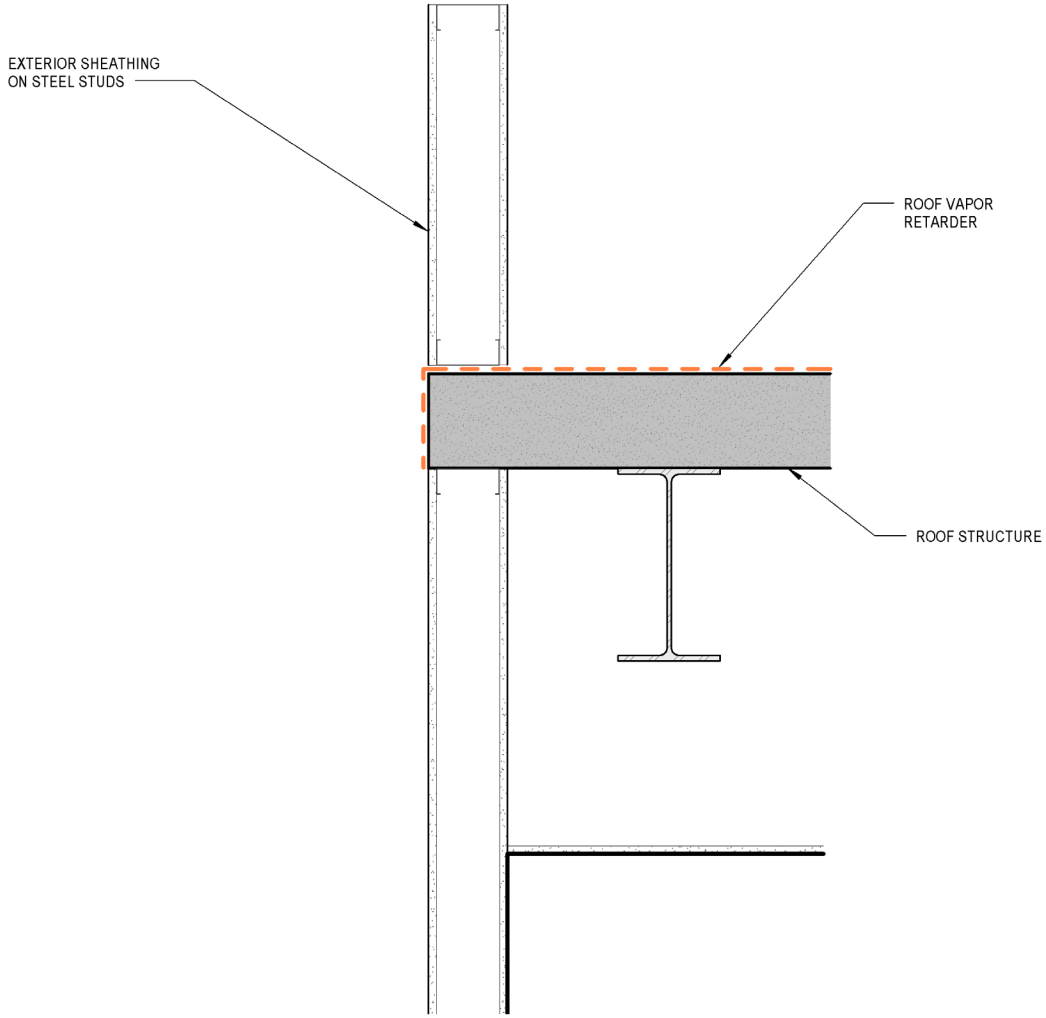

Option 2 (humidified interior environment)

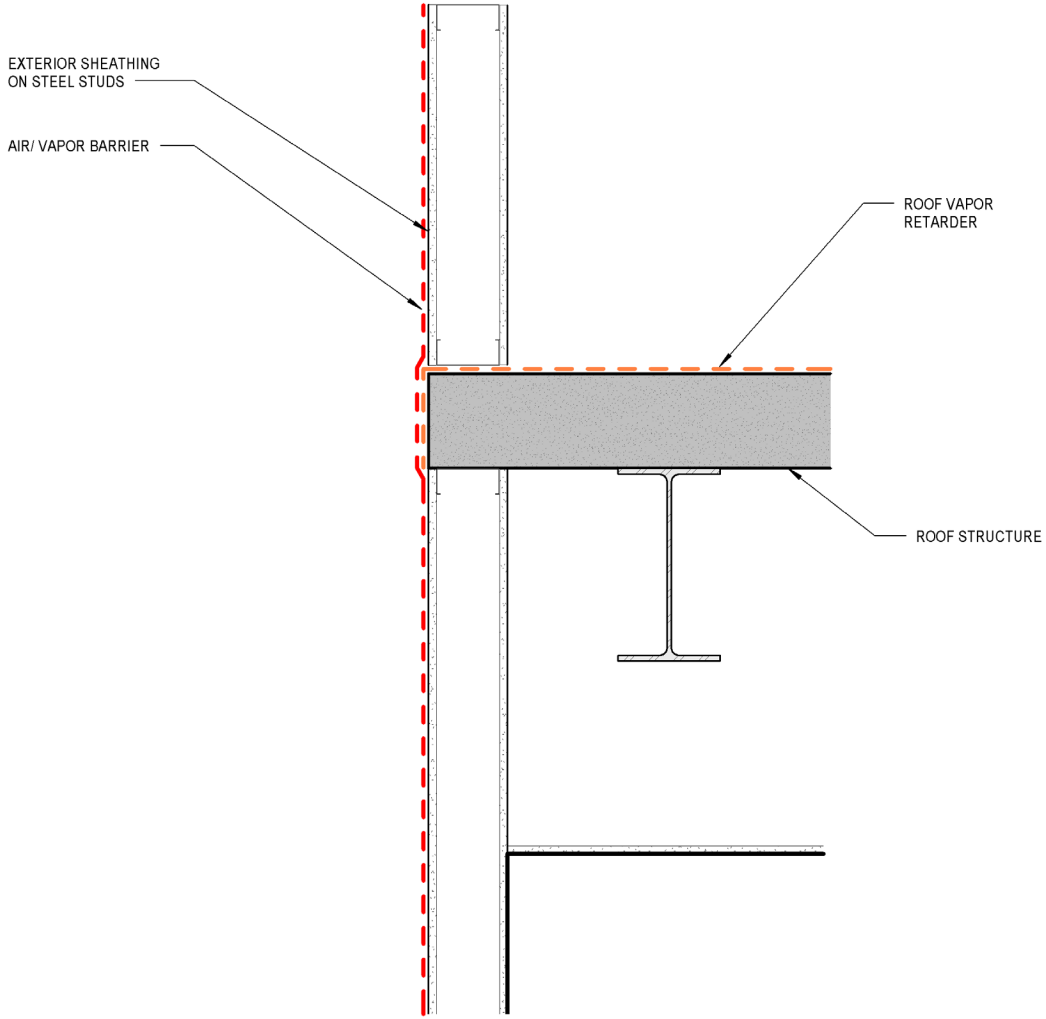

Option 2 (humidified interior environment)

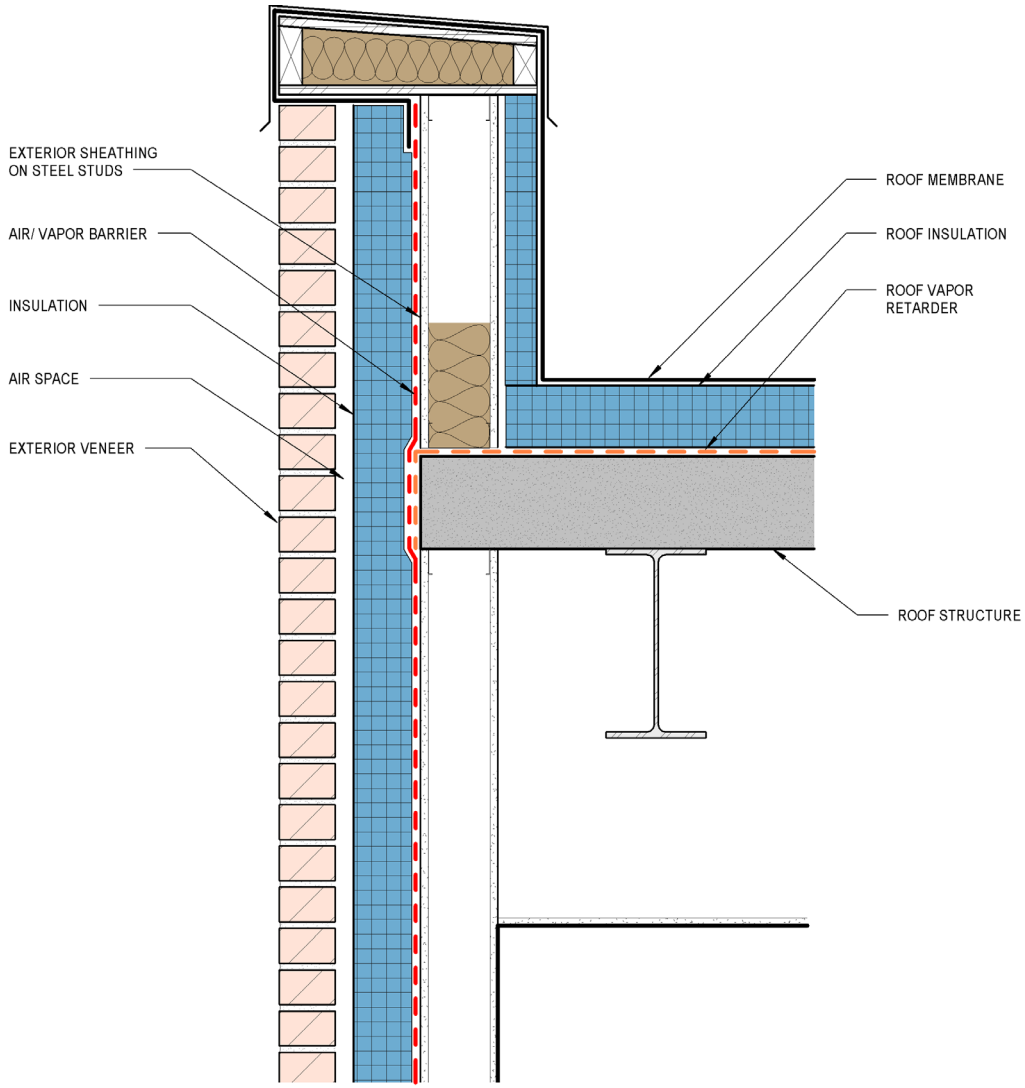

Structural Note

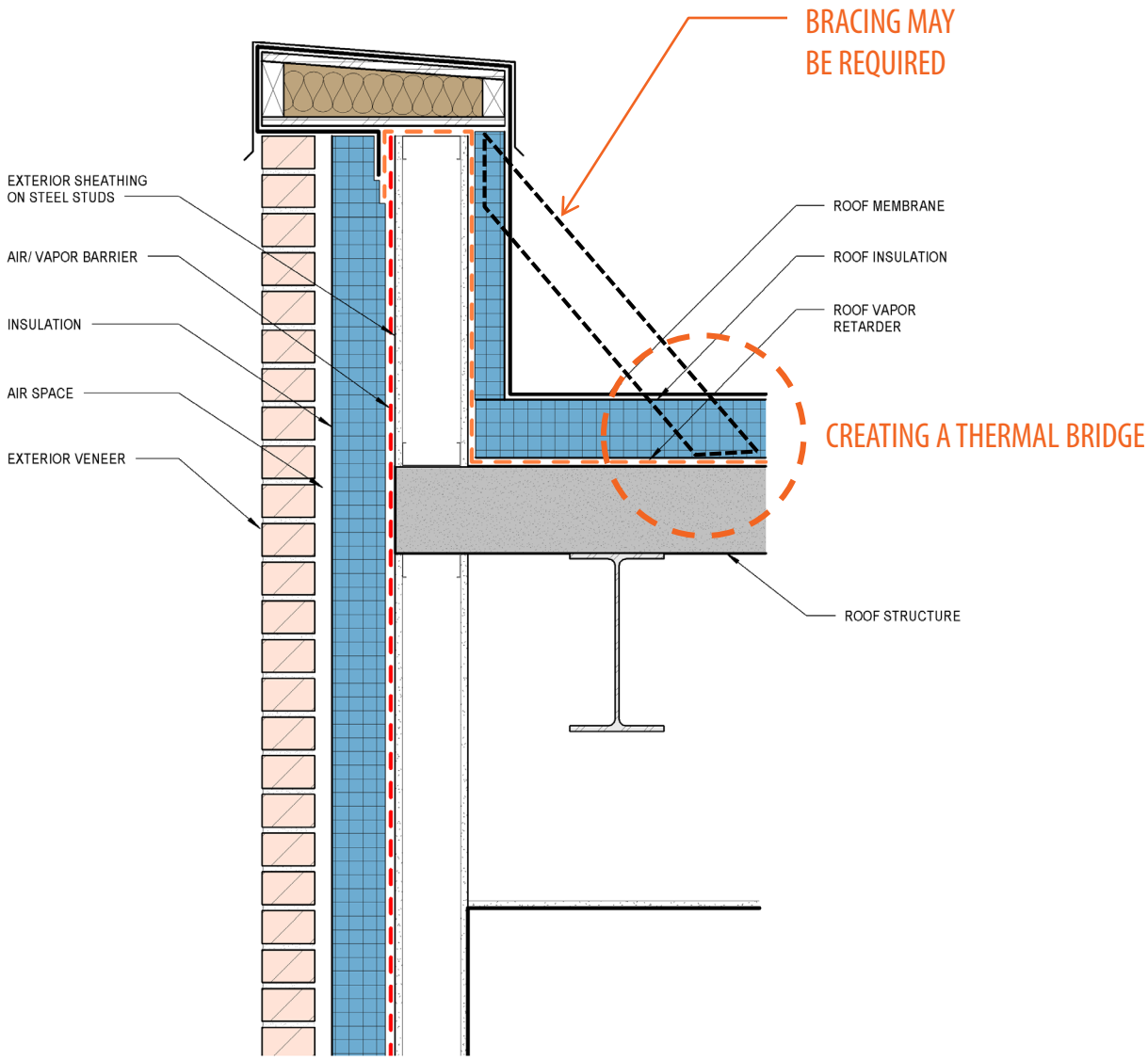

Steel Stud Balloon Frame

Option 1

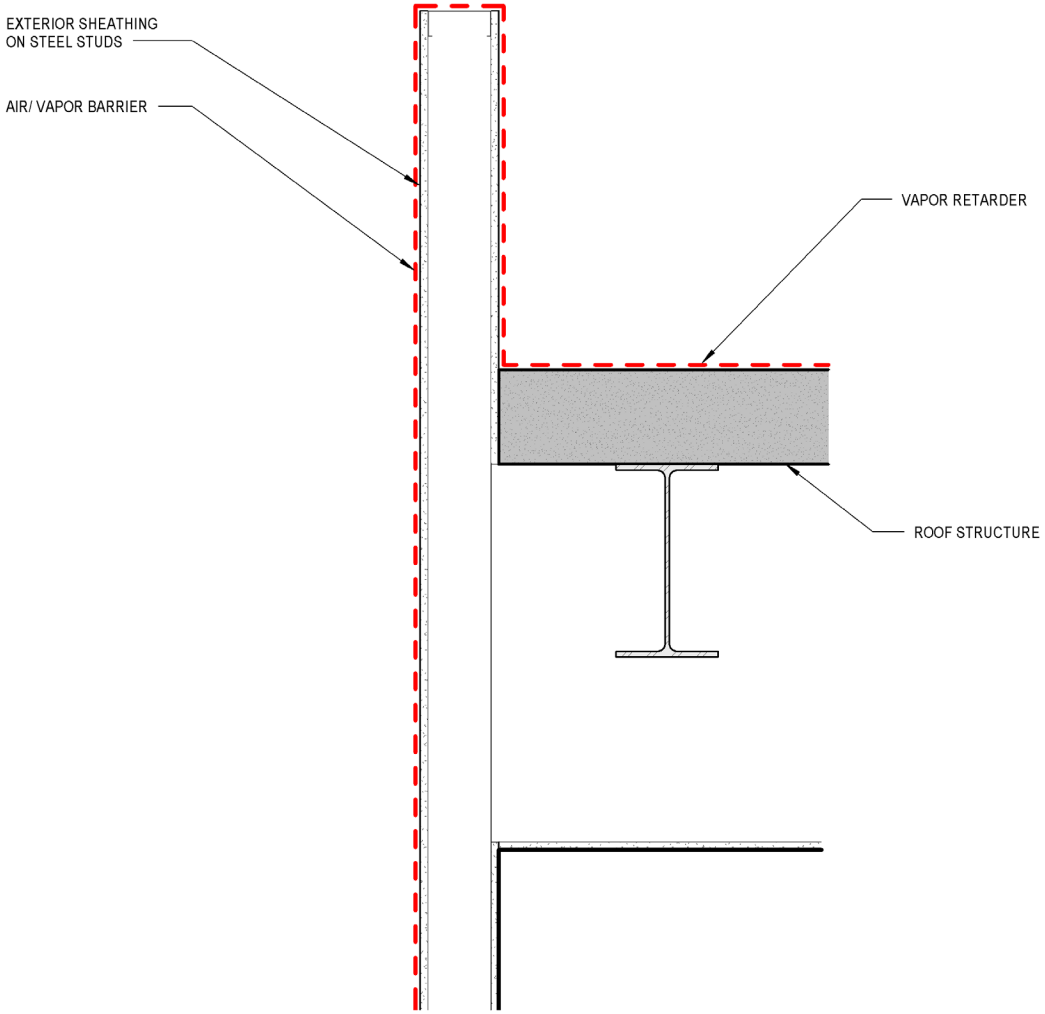
EXTERIOR SHEATHING
ON STEEL STUDS
AIR/ VAPOR BARRIER
VAPOR RETARDER
ROOF STRUCTURE

Option 1

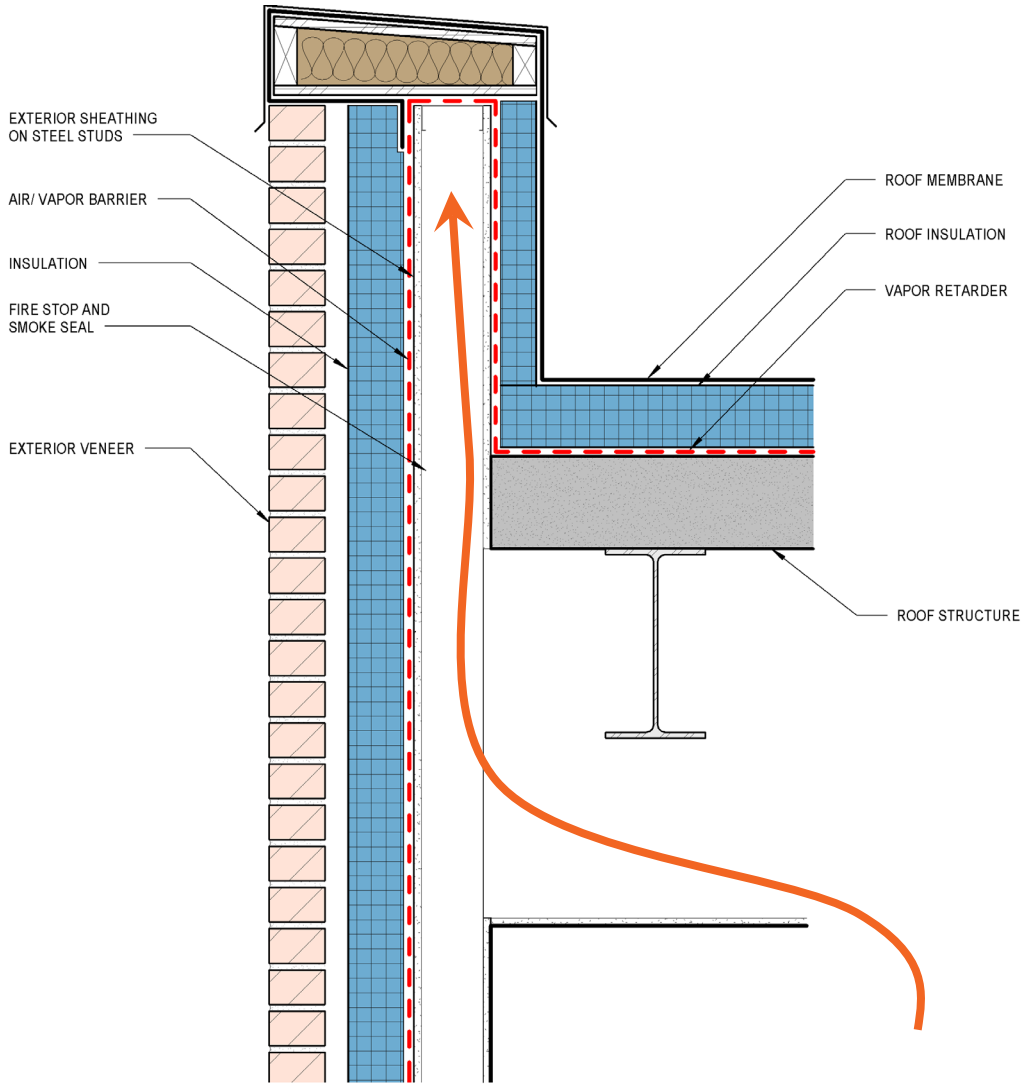
EXTERIOR SHEATHING
ON STEEL STUDS
AIR/ VAPOR BARRIER
INSULATION
FIRE STOP AND
SMOKE SEAL
EXTERIOR VENEER
ROOF MEMBRANE
ROOF INSULATION
VAPOR RETARDER
ROOF STRUCTURE

Option 1

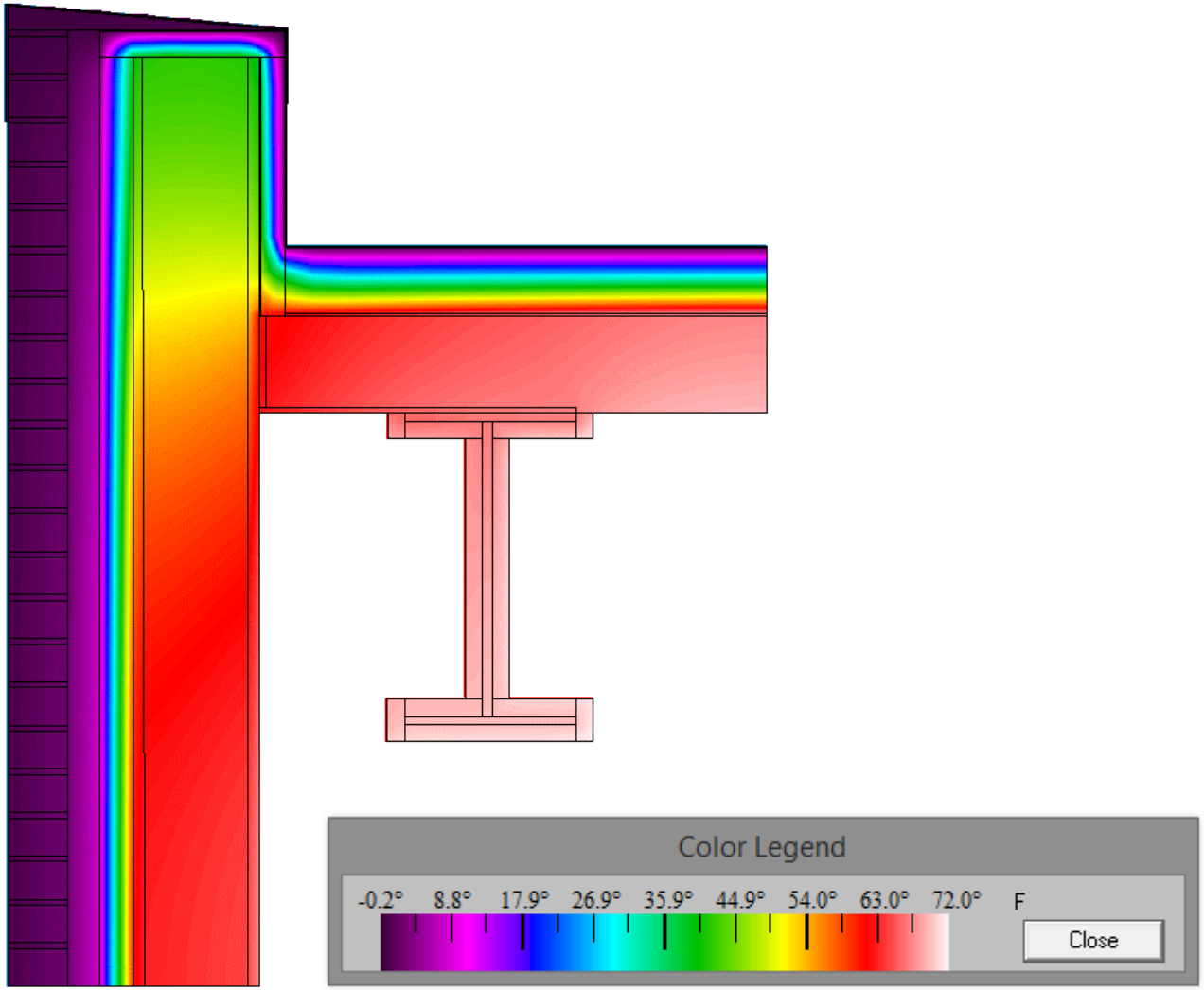

Option 2

Option 2

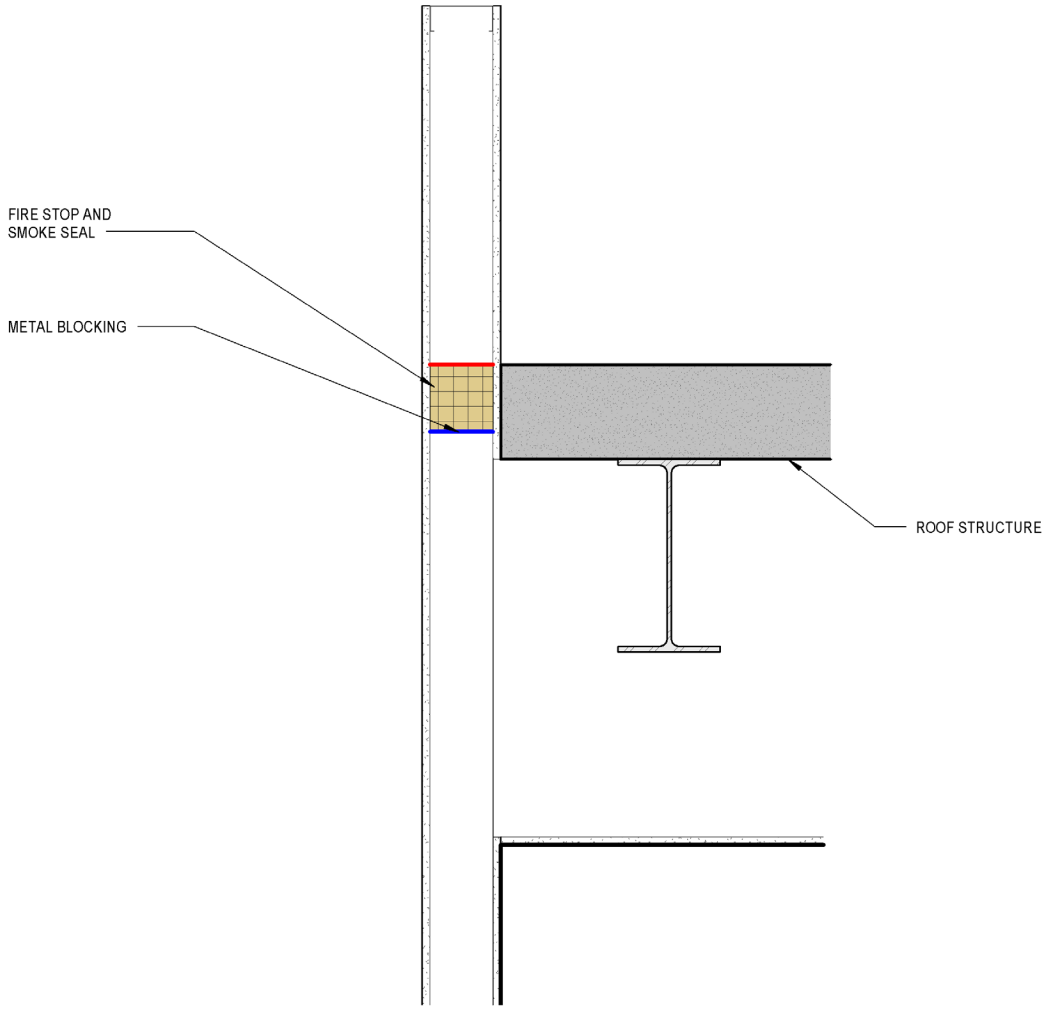

Option 2

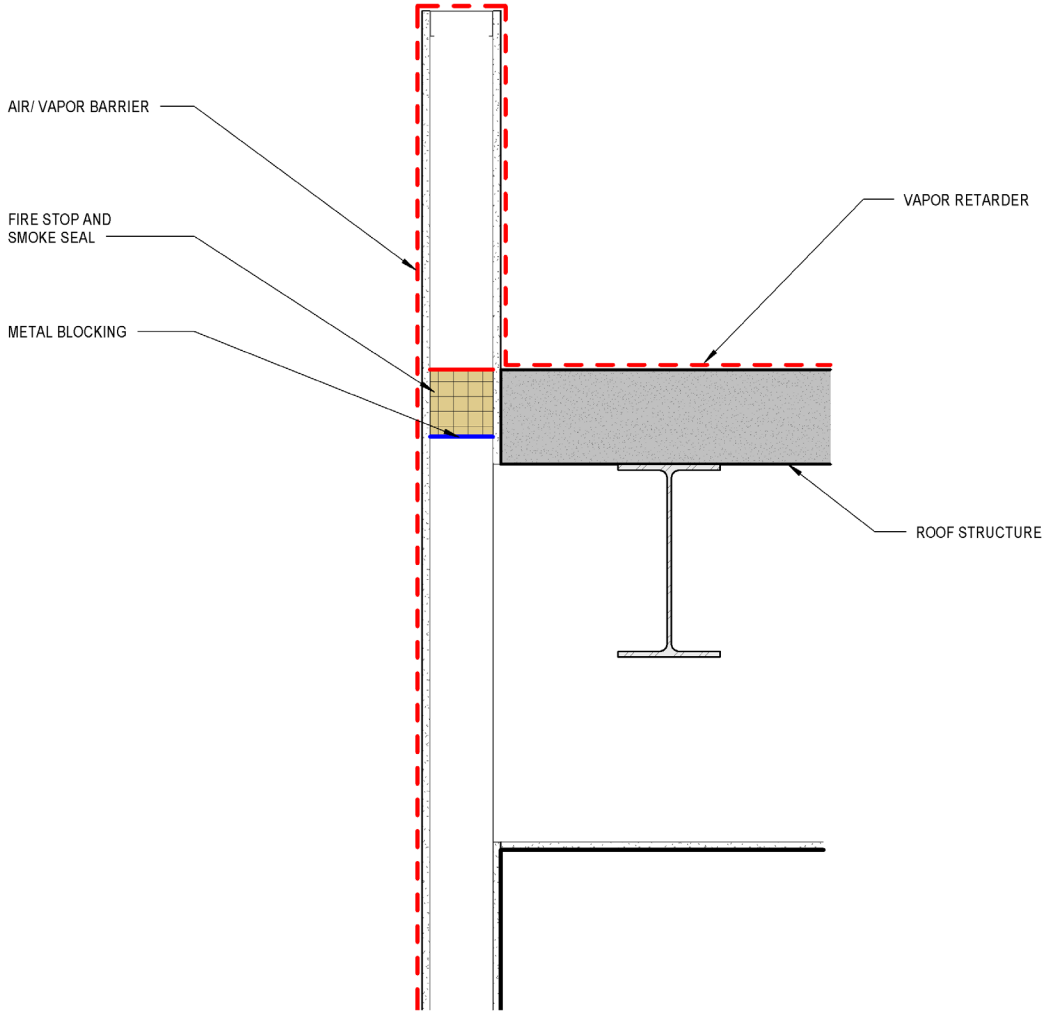
AIR/ VAPOR BARRIER
FIRE STOP AND
SMOKE SEAL
METAL BLOCKING
VAPOR RETARDER
ROOF STRUCTURE

Option 2

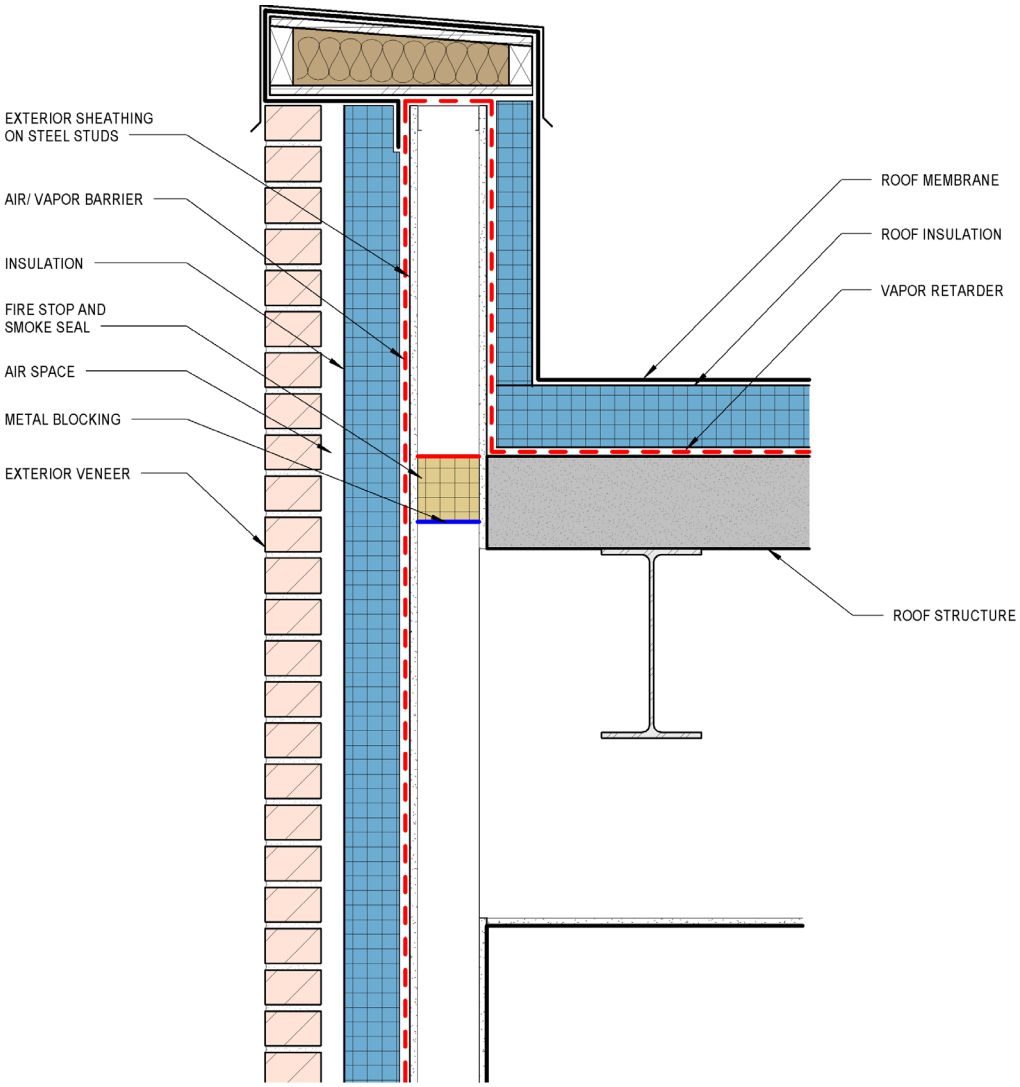
EXTERIOR SHEATHING
ON STEEL STUDS
AIR/ VAPOR BARRIER
INSULATION
FIRE STOP AND
SMOKE SEAL
AIR SPACE
METAL BLOCKING
EXTERIOR VENEER
ROOF MEMBRANE
ROOF INSULATION
VAPOR RETARDER
ROOF STRUCTURE

WARNING!!!

120/208 VOLT

MIAMI-DADE COUNTY
10/23/12

CMU Parapet Options

CMU Parapet Option – Non-Humidified

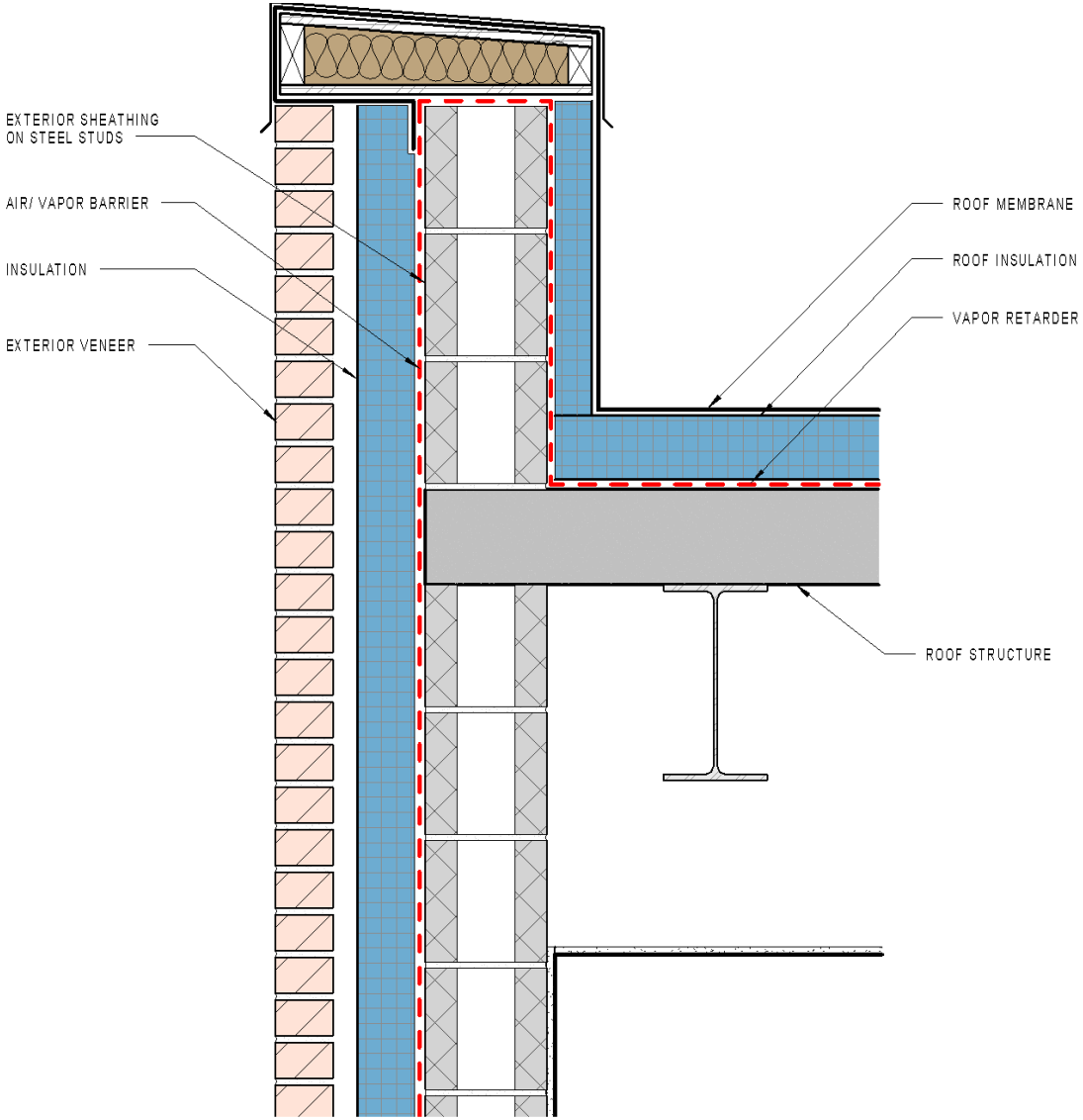

CMU Parapet Option – Non-Humidified

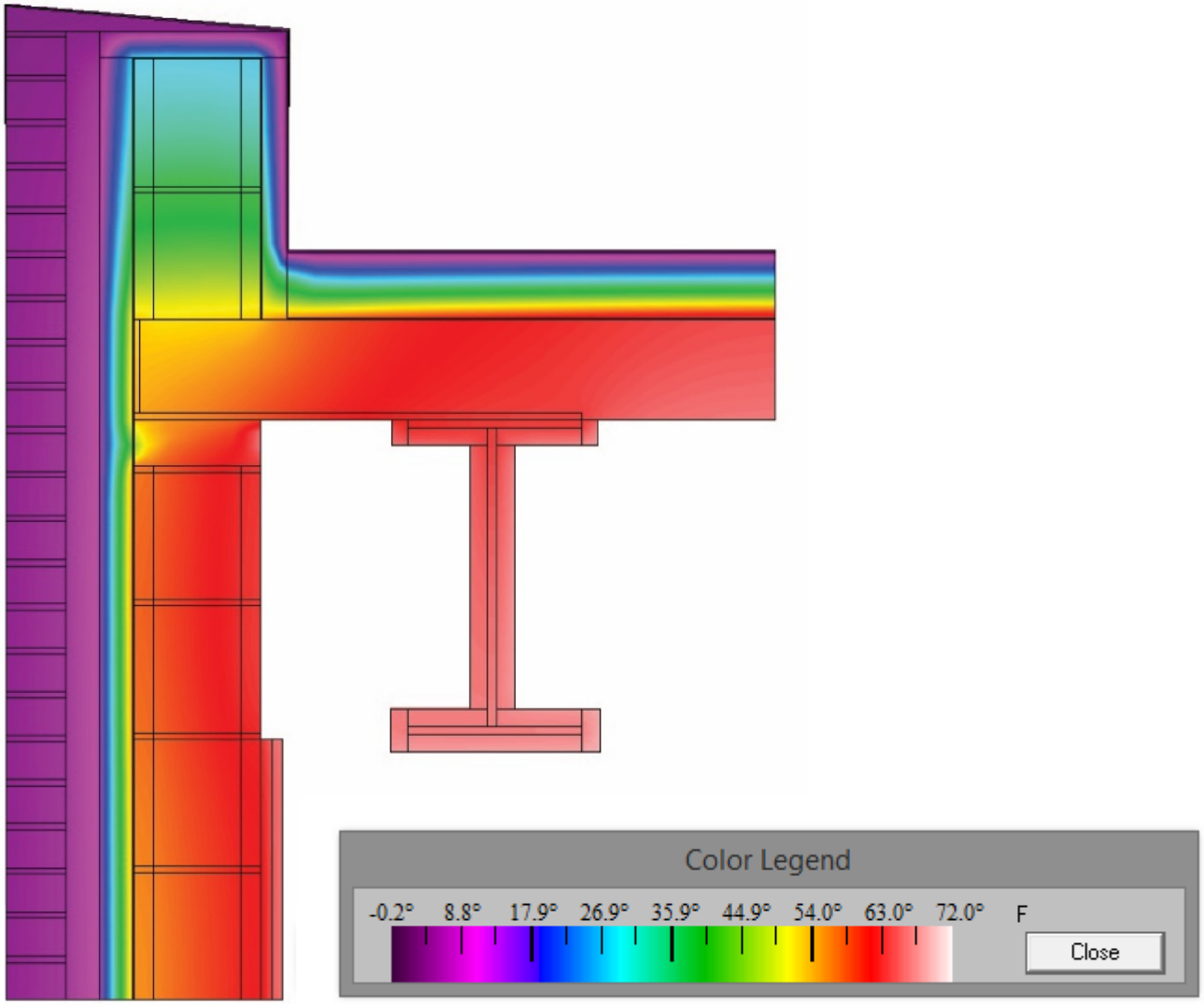

CMU Parapet Option – Non-Humidified

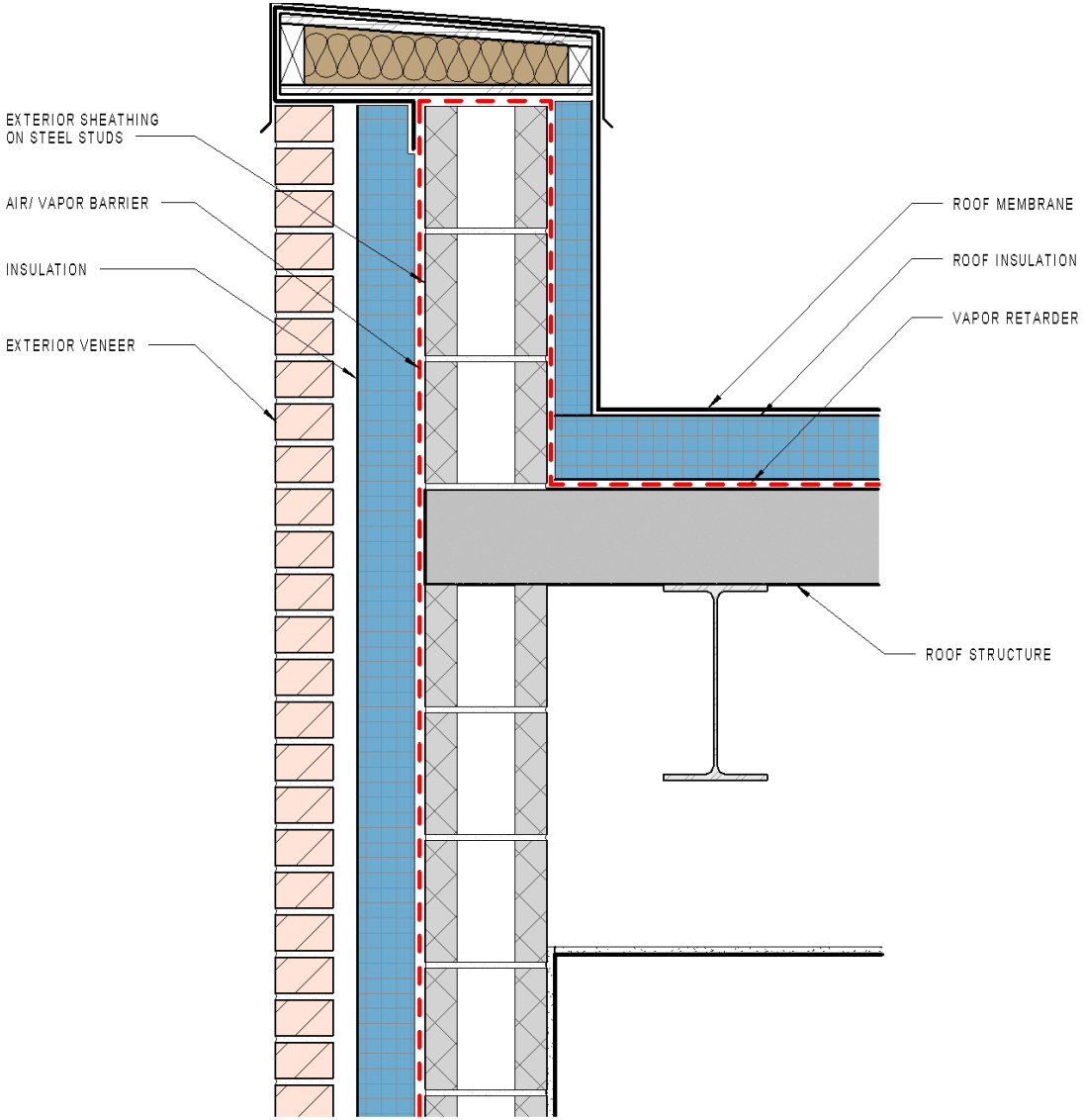

CMU Parapet Option - Humidified

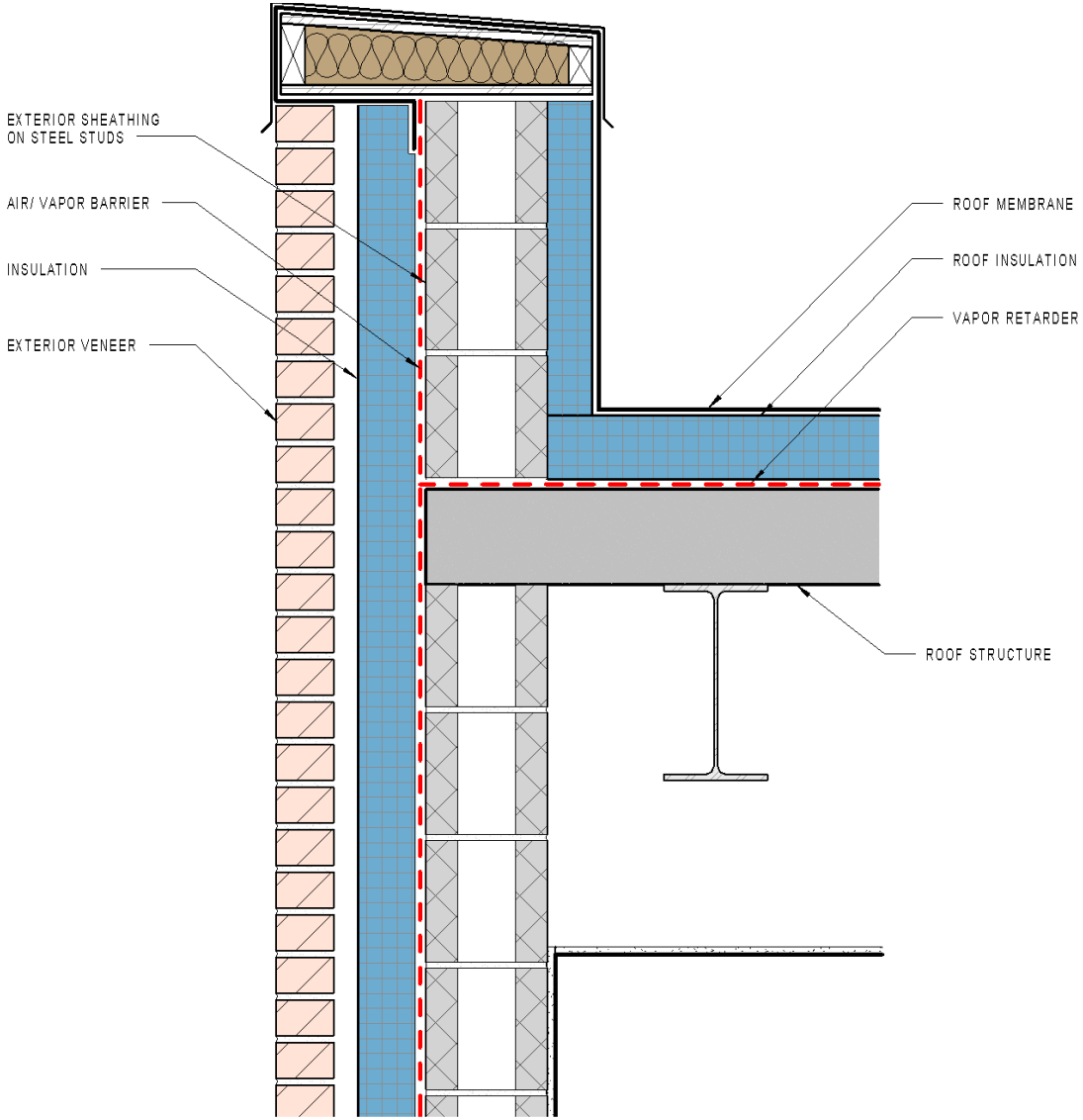

Don’t forget the other Roof/Wall

Low Roof / High Wall

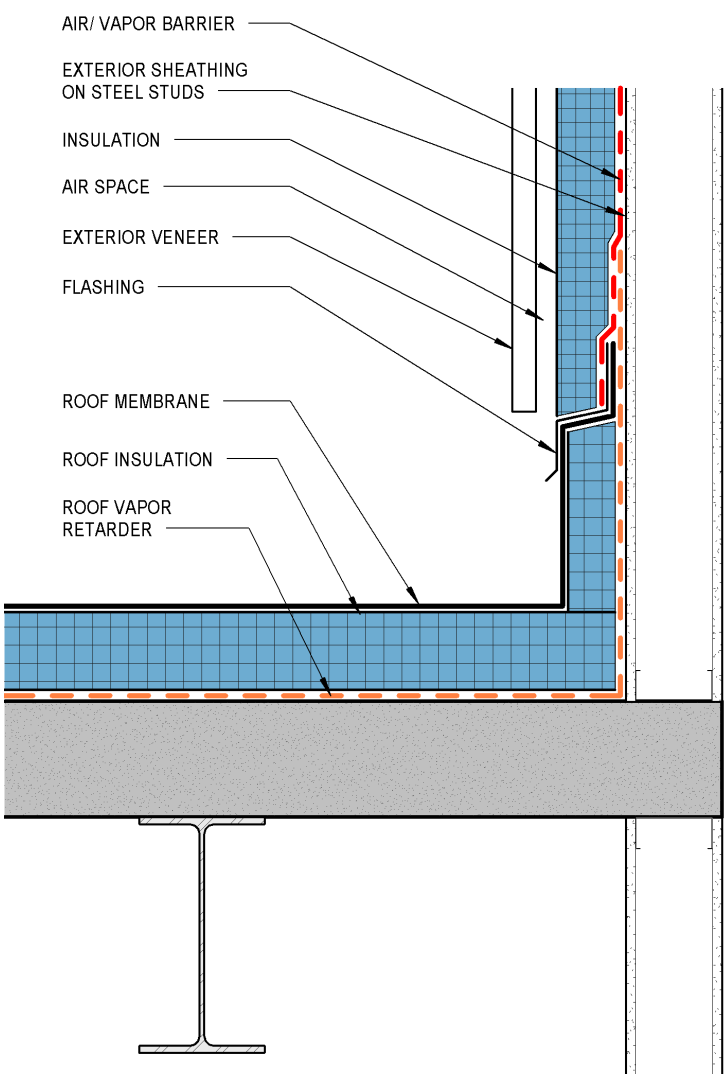

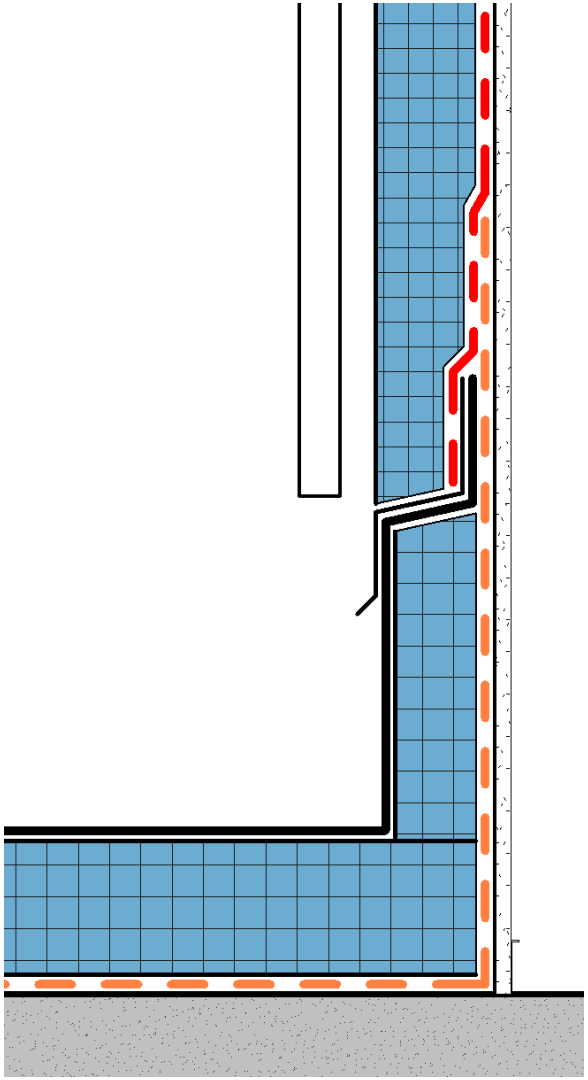

What’s Wrong with this Detail?

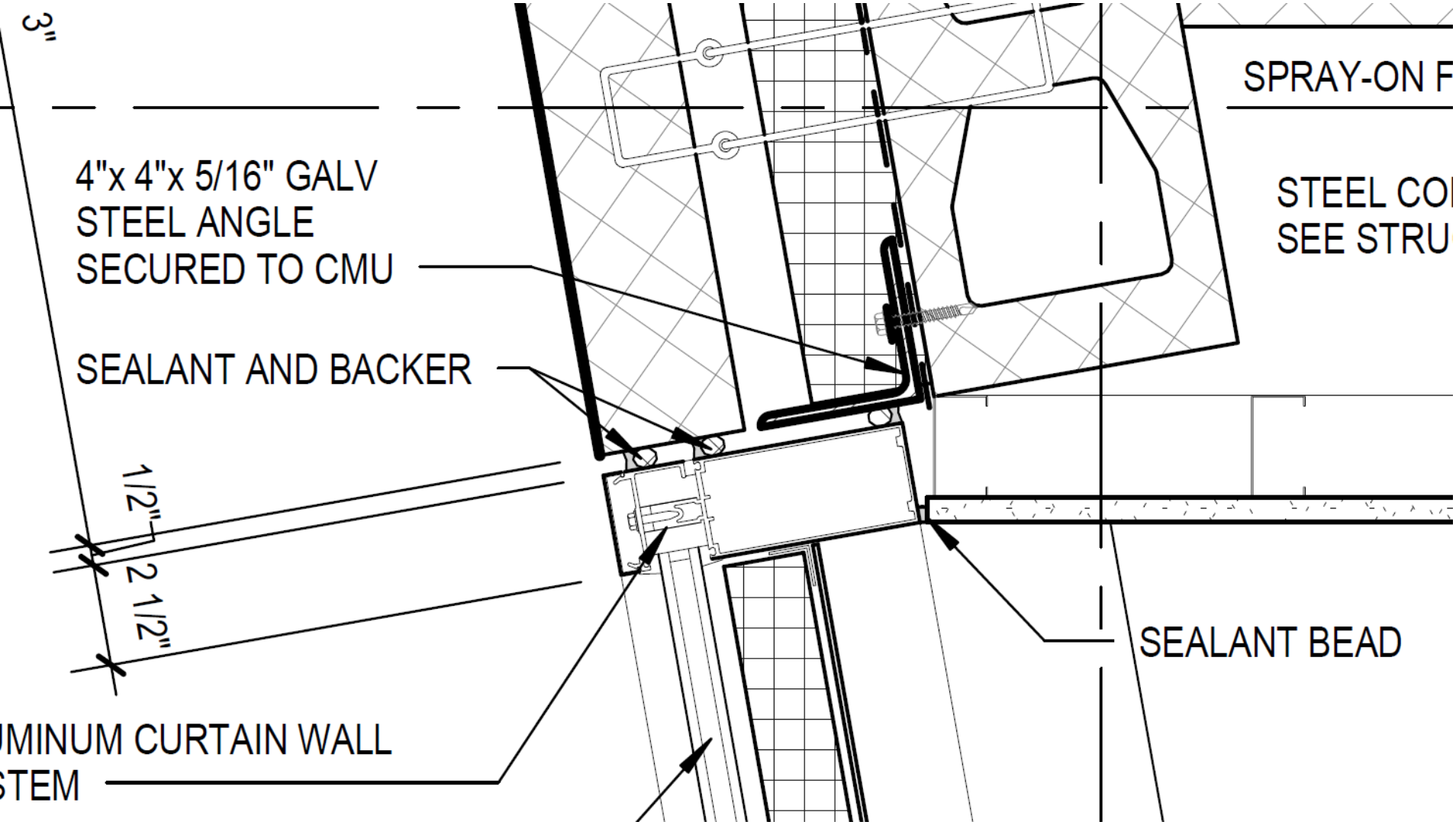
3"
4"x 4"x 5/16" GALV
STEEL ANGLE
SECURED TO CMU
SEALANT AND BACKER
1/2"
2 1/2"
UMINUM CURTAIN WALL
STEM
SPRAY-ON F
STEEL CO
SEE STRU
SEALANT BEAD

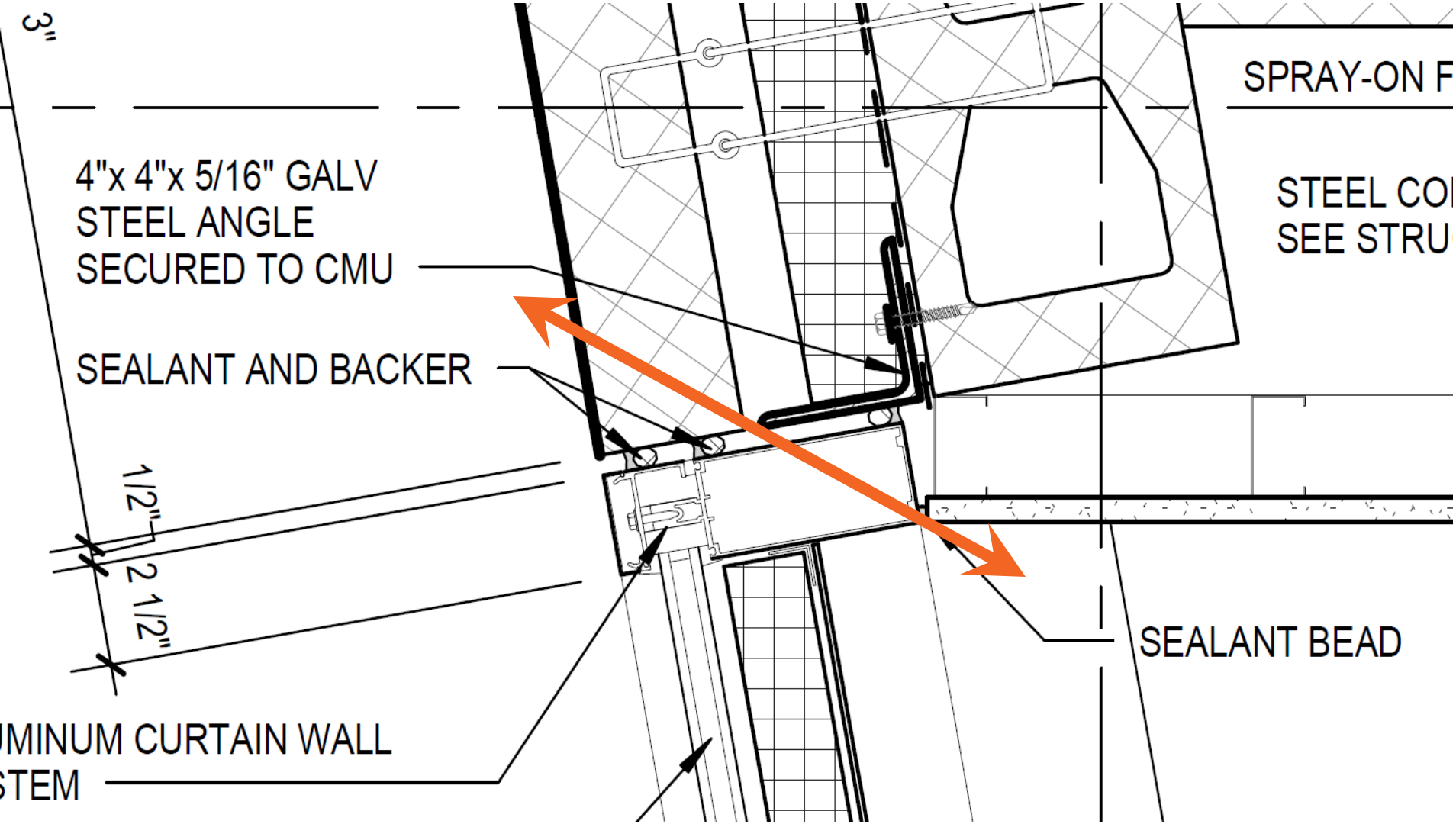
3"
4"x 4"x 5/16" GALV
STEEL ANGLE
SECURED TO CMU
SEALANT AND BACKER
1/2"
2 1/2"
UMINUM CURTAIN WALL
STEM
SPRAY-ON F
STEEL CO
SEE STRU
SEALANT BEAD

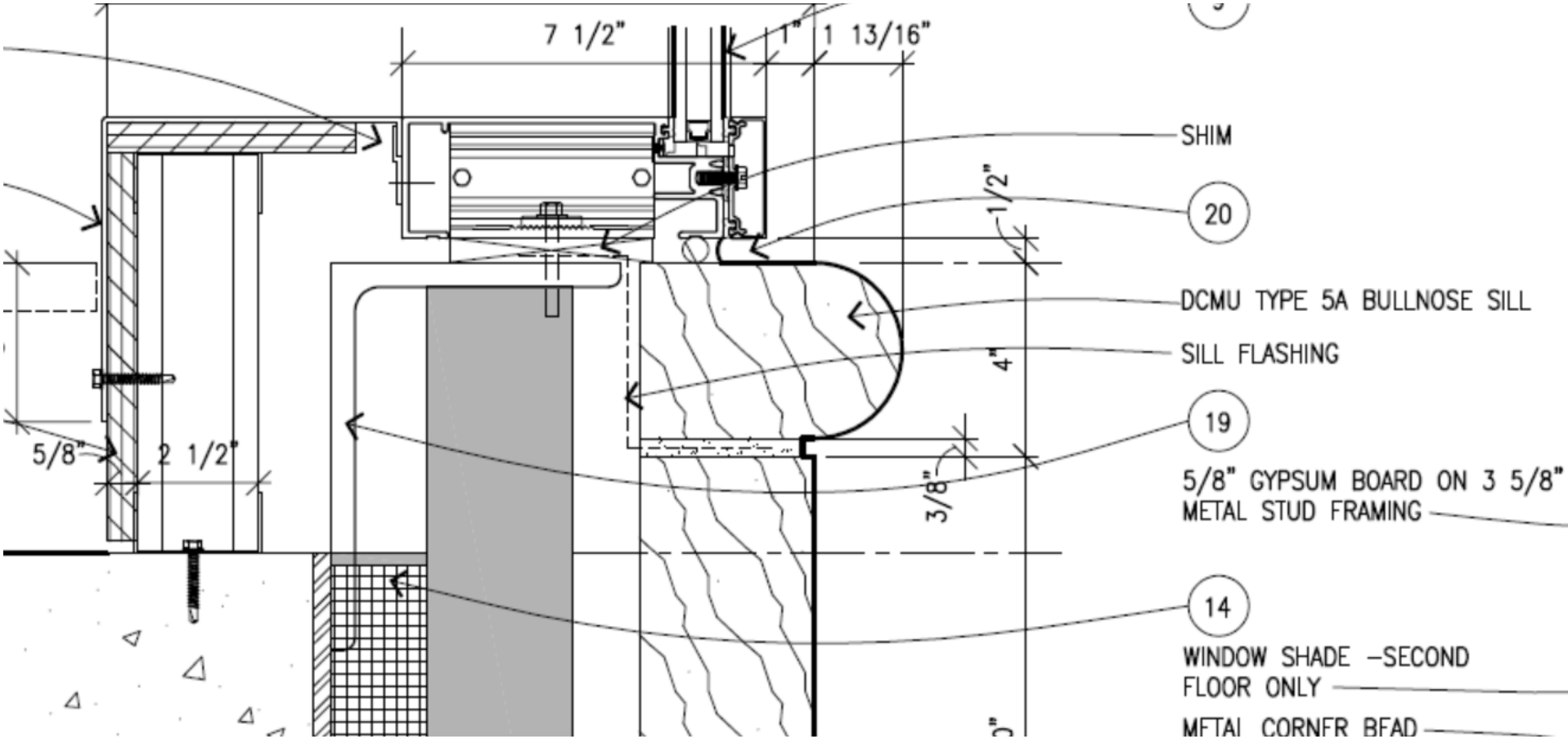
7 1/2"
1"
1 13/16"
SHIM
20
1/2"
DCMU TYPE 5A BULLNOSE SILL
SILL FLASHING
4"
19
5/8"
2 1/2"
3/8"
5/8" GYPSUM BOARD ON 3 5/8"
METAL STUD FRAMING
14
WINDOW SHADE –SECOND
FLOOR ONLY
METAL CORNER BEAD

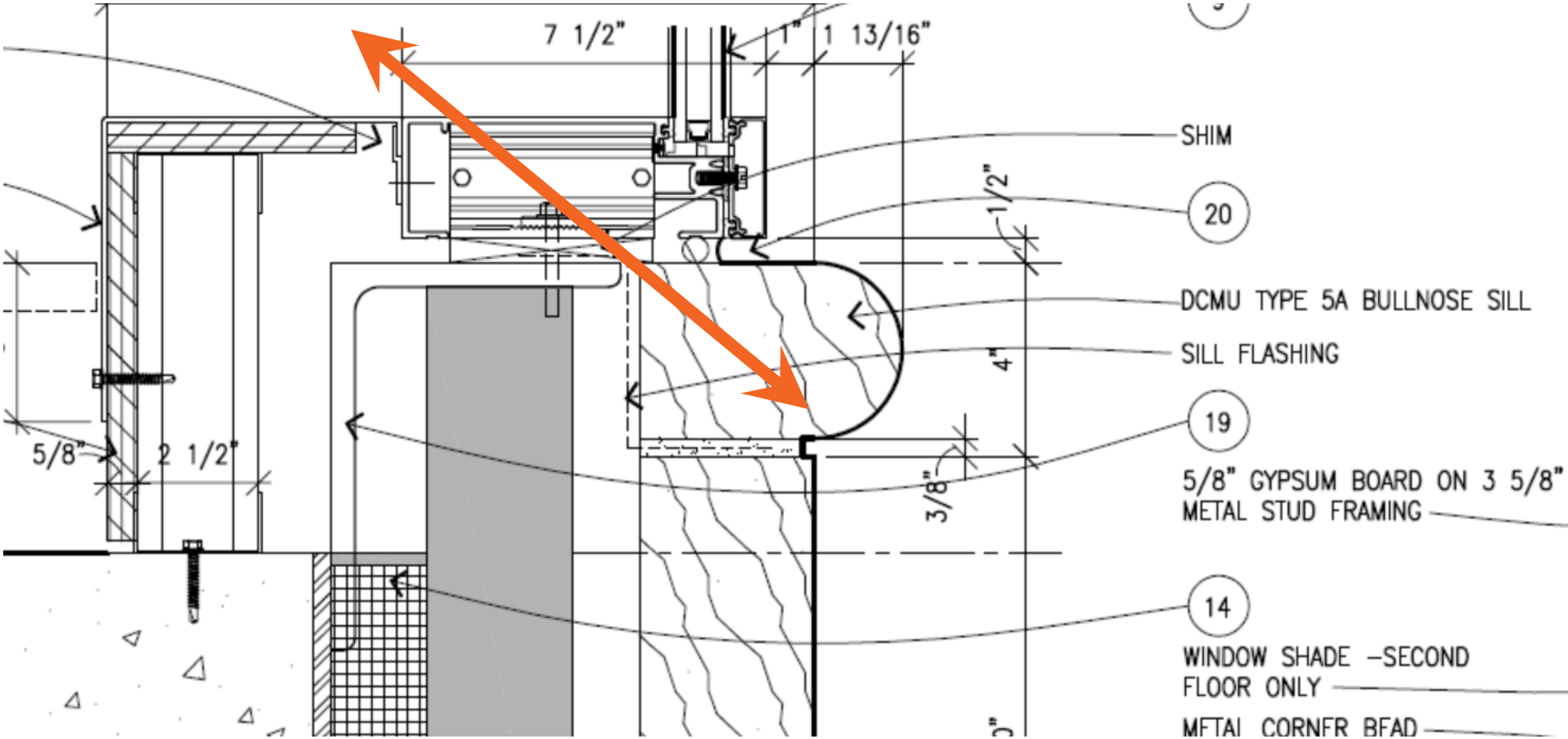
7 1/2"
1"
1 13/16"
SHIM
20
1/2"
DCMU TYPE 5A BULLNOSE SILL
SILL FLASHING
4"
19
5/8"
2 1/2"
3/8"
5/8" GYPSUM BOARD ON 3 5/8"
METAL STUD FRAMING
14
WINDOW SHADE –SECOND
FLOOR ONLY
METAL CORNER BEAD

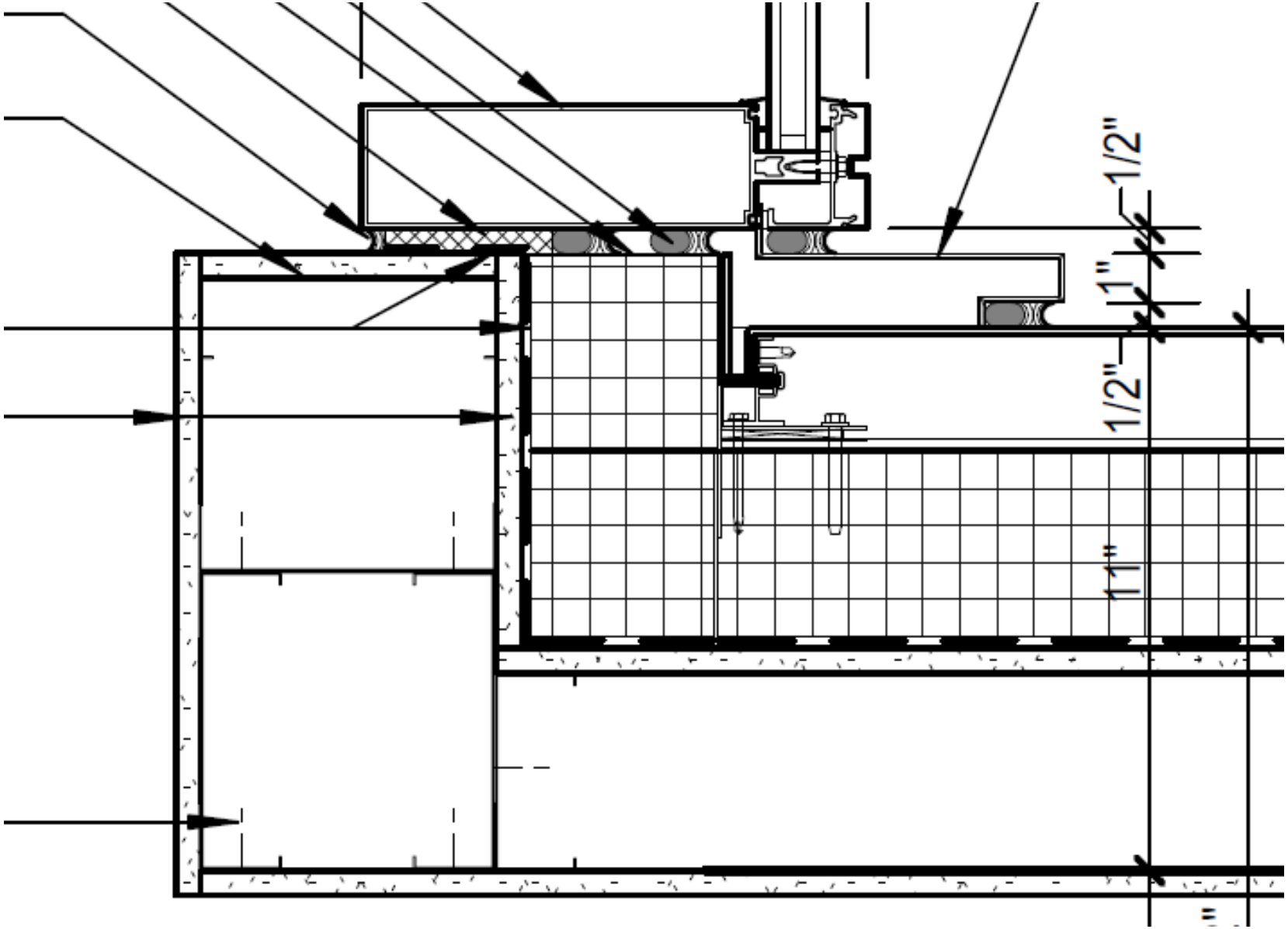
1/2"
1"
1/2"
1 1"

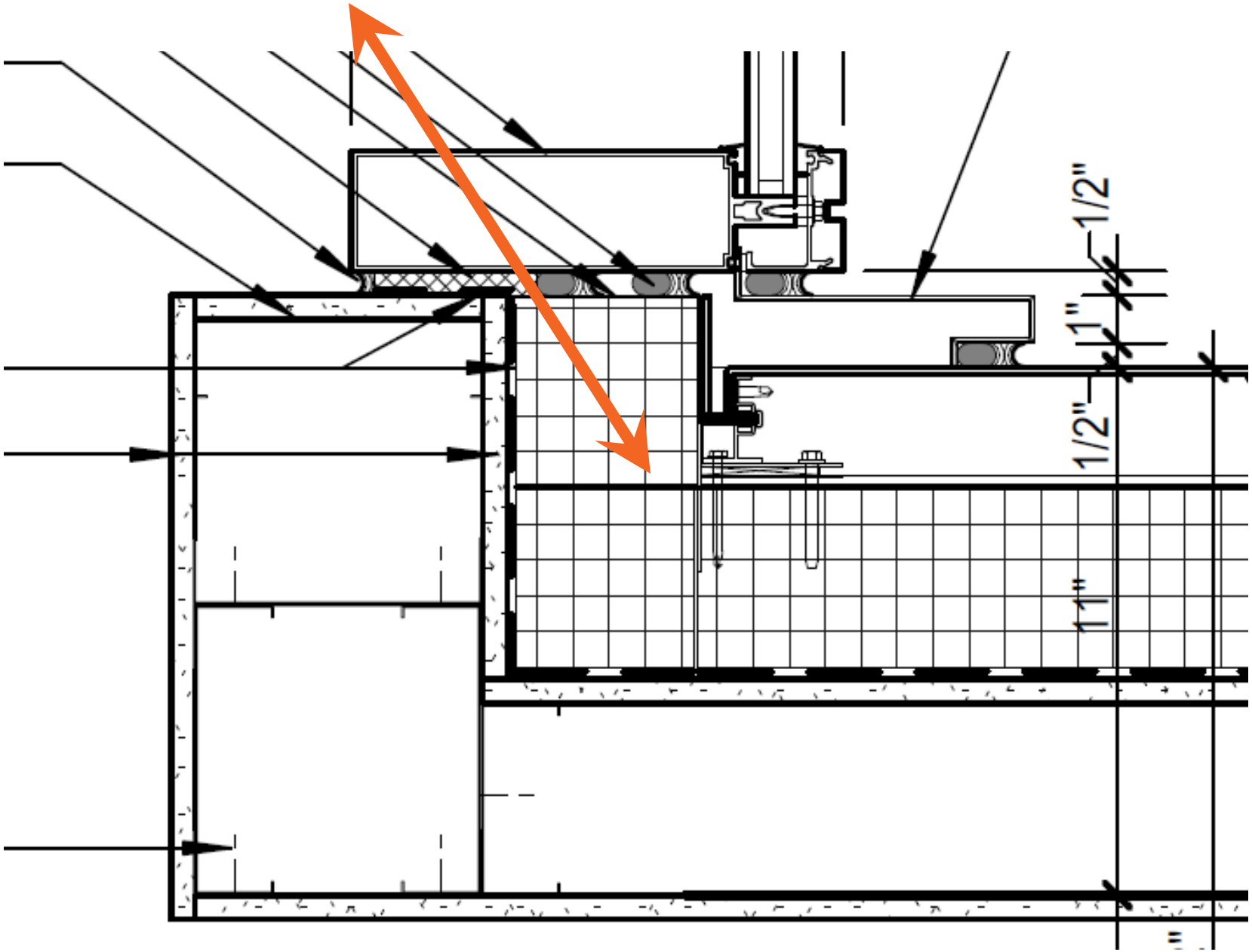
1/2"
1"
1/2"
1 1"

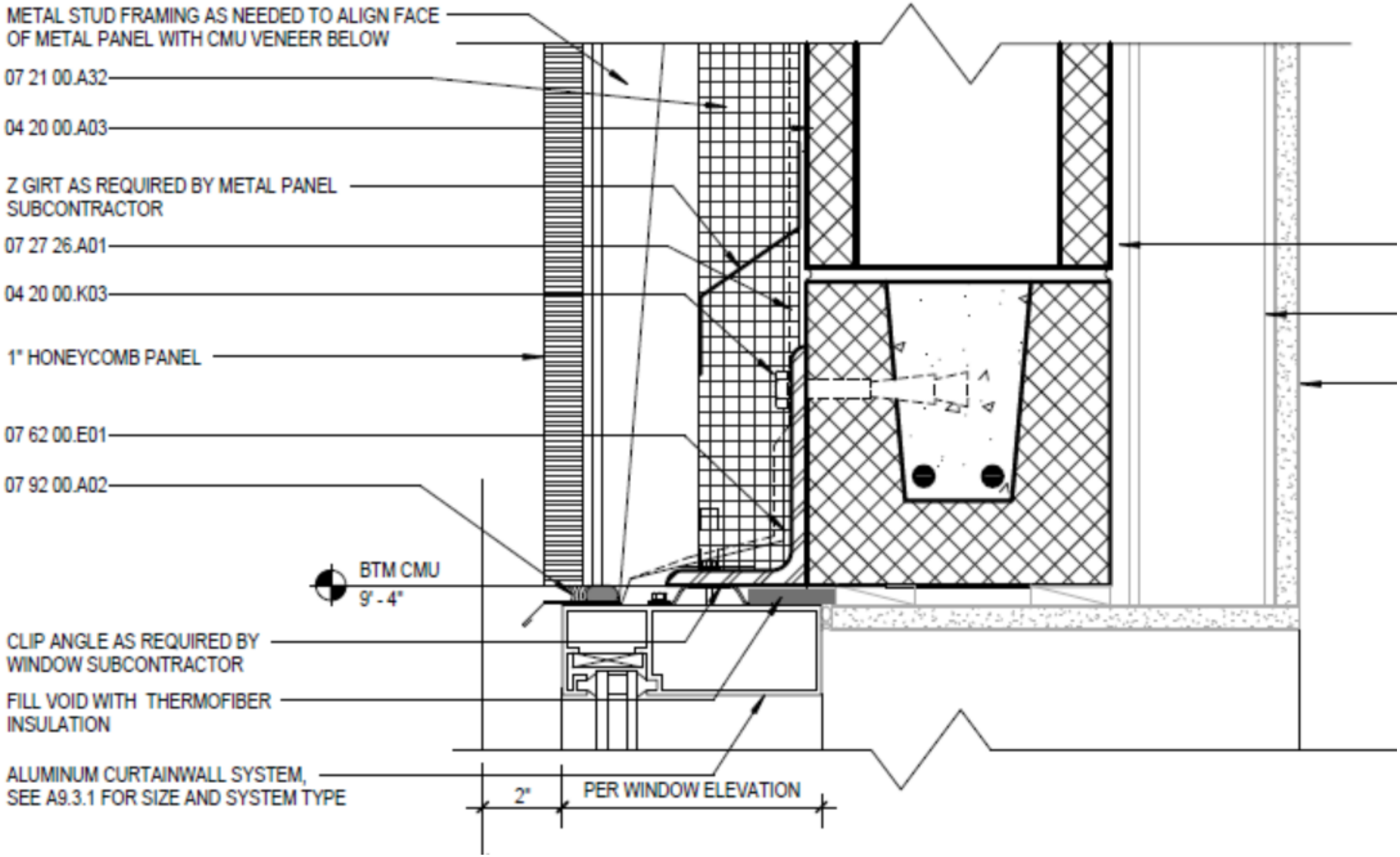
METAL STUD FRAMING AS NEEDED TO ALIGN FACE OF METAL PANEL WITH CMU VENEER BELOW
07 21 00.A32
04 20 00.A03
Z GIRT AS REQUIRED BY METAL PANEL SUBCONTRACTOR
07 27 26.A01
04 20 00.K03
1" HONEYCOMB PANEL
07 62 00.E01
07 92 00.A02
BTM CMU
9' - 4"
CLIP ANGLE AS REQUIRED BY WINDOW SUBCONTRACTOR
FILL VOID WITH THERMOFIBER INSULATION
ALUMINUM CURTAINWALL SYSTEM, SEE A9.3.1 FOR SIZE AND SYSTEM TYPE
2"
PER WINDOW ELEVATION

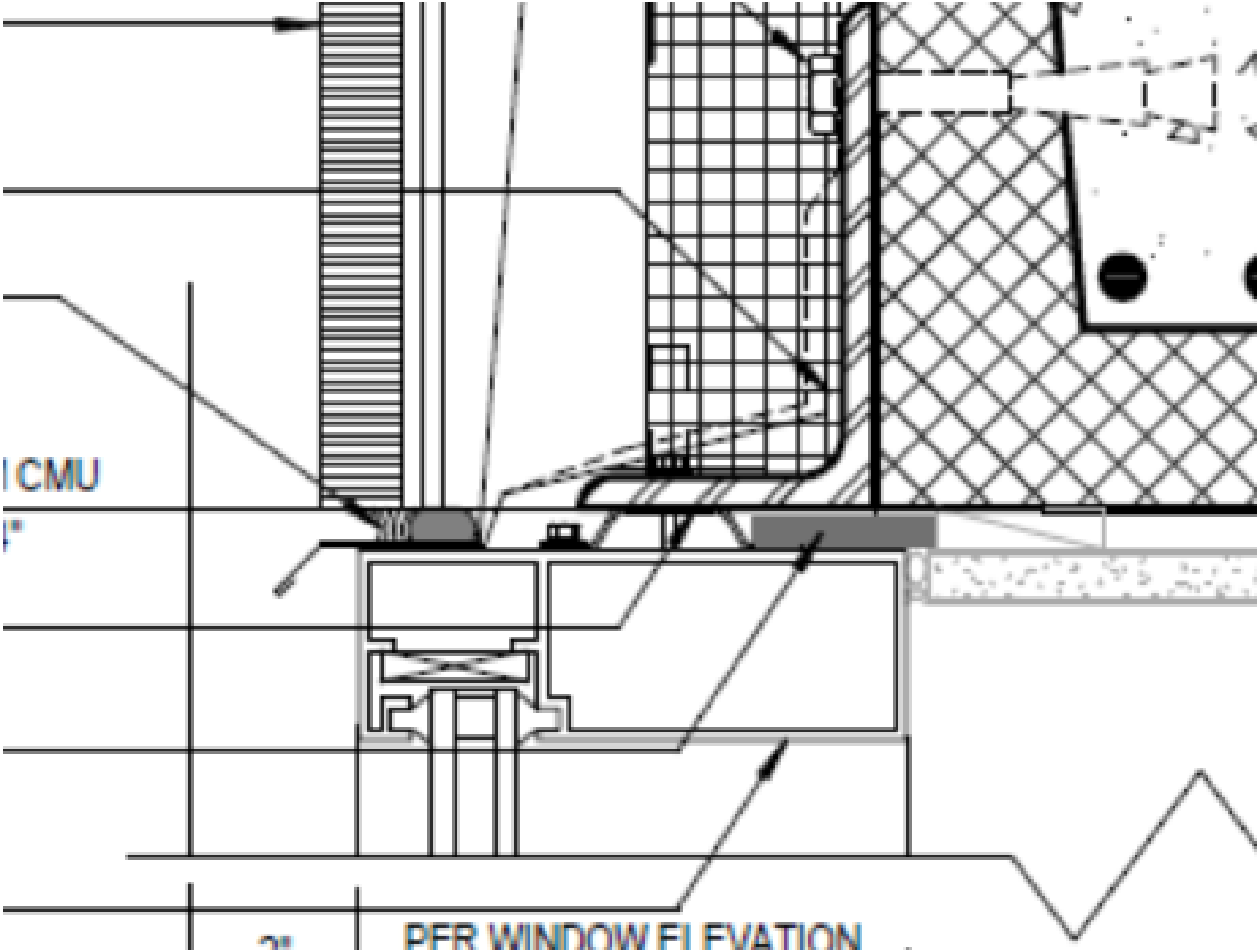
CMU
PER WINDOW ELEVATION

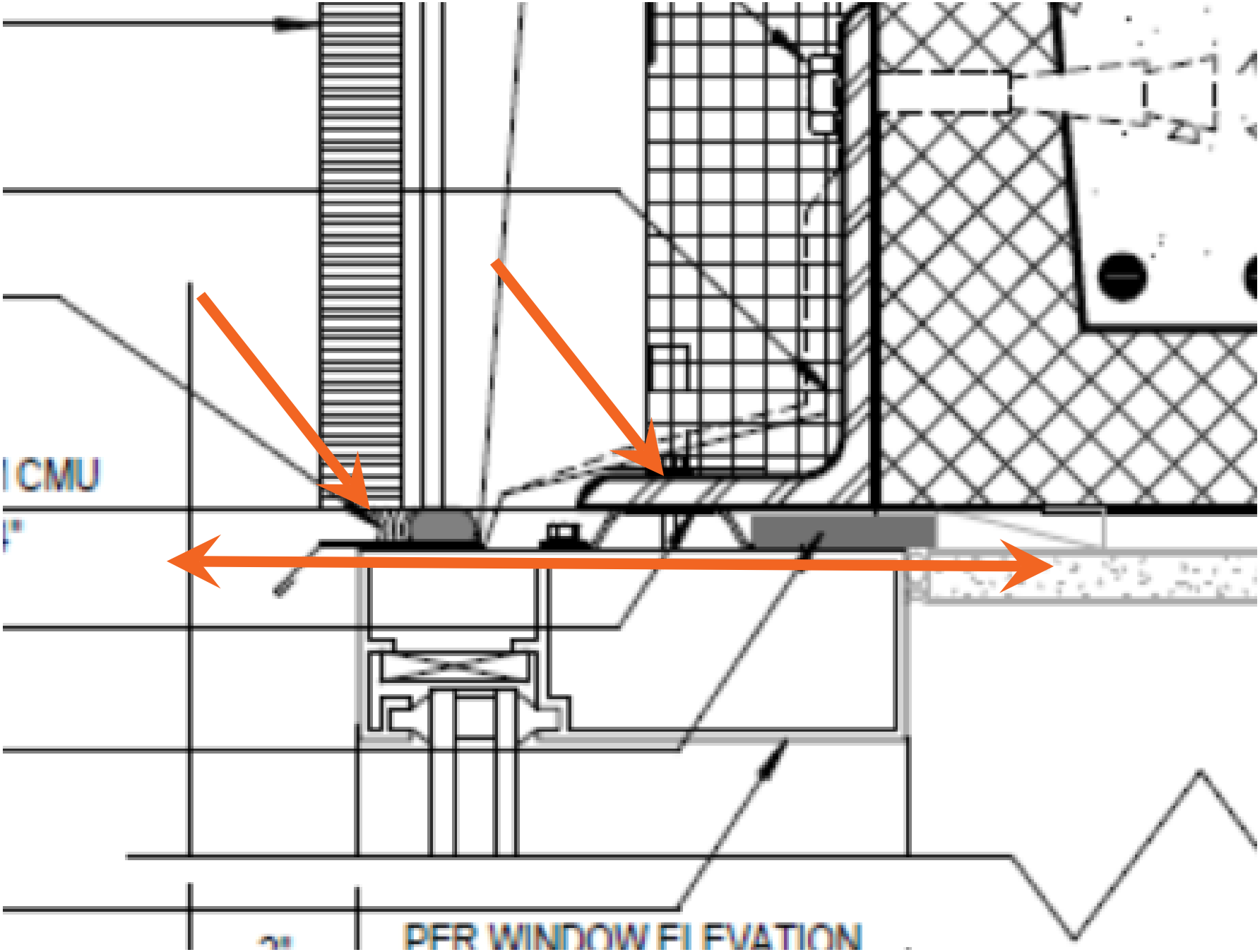
CMU
PER WINDOW ELEVATION

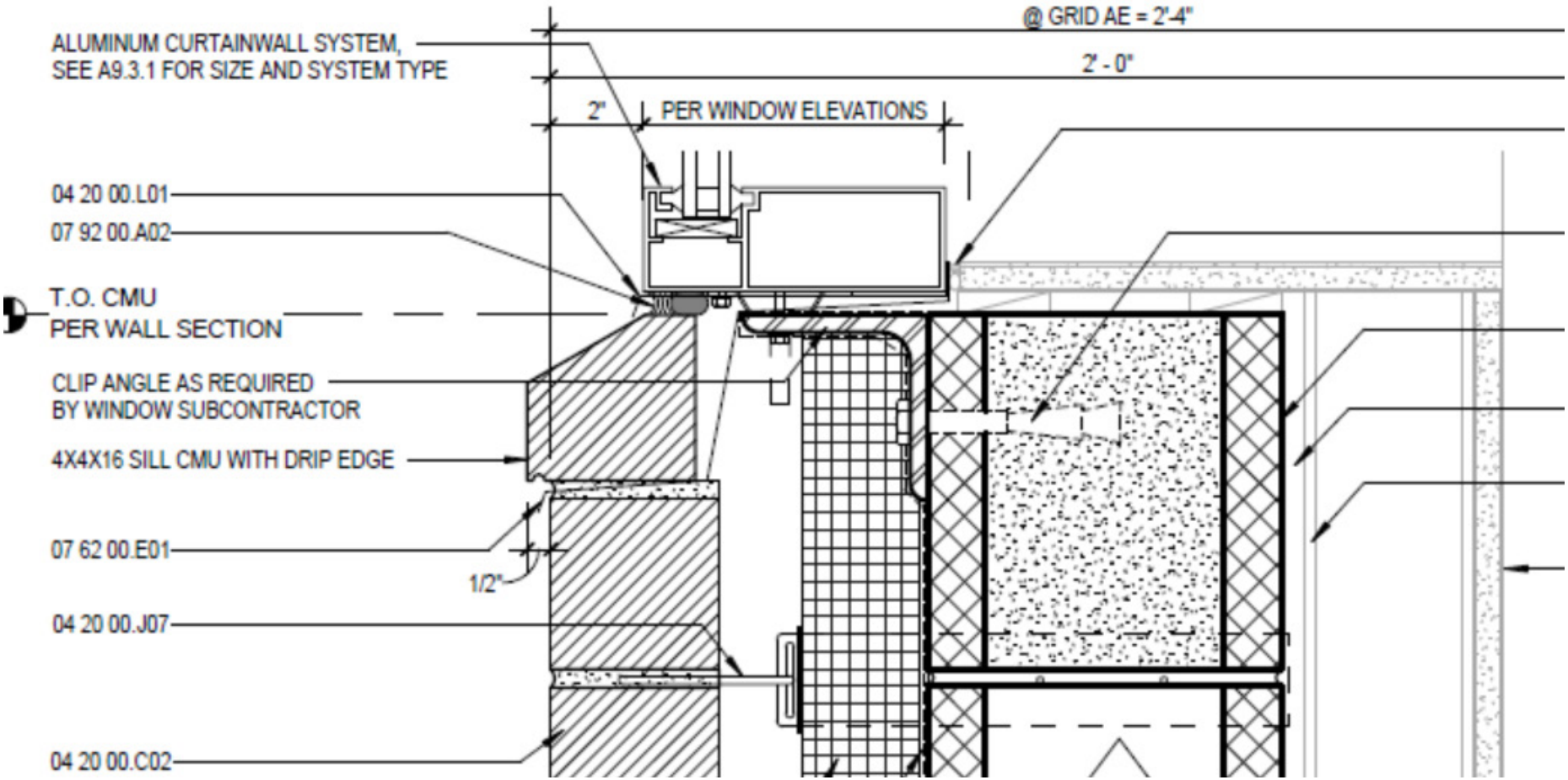
@ GRID AE = 2'-4"
2' - 0"
2"
PER WINDOW ELEVATIONS
ALUMINUM CURTAINWALL SYSTEM,
SEE A9.3.1 FOR SIZE AND SYSTEM TYPE
04 20 00.L01
07 92 00.A02
T.O. CMU
PER WALL SECTION
CLIP ANGLE AS REQUIRED
BY WINDOW SUBCONTRACTOR
4X4X16 SILL CMU WITH DRIP EDGE
07 62 00.E01
1/2"
04 20 00.J07
04 20 00.C02

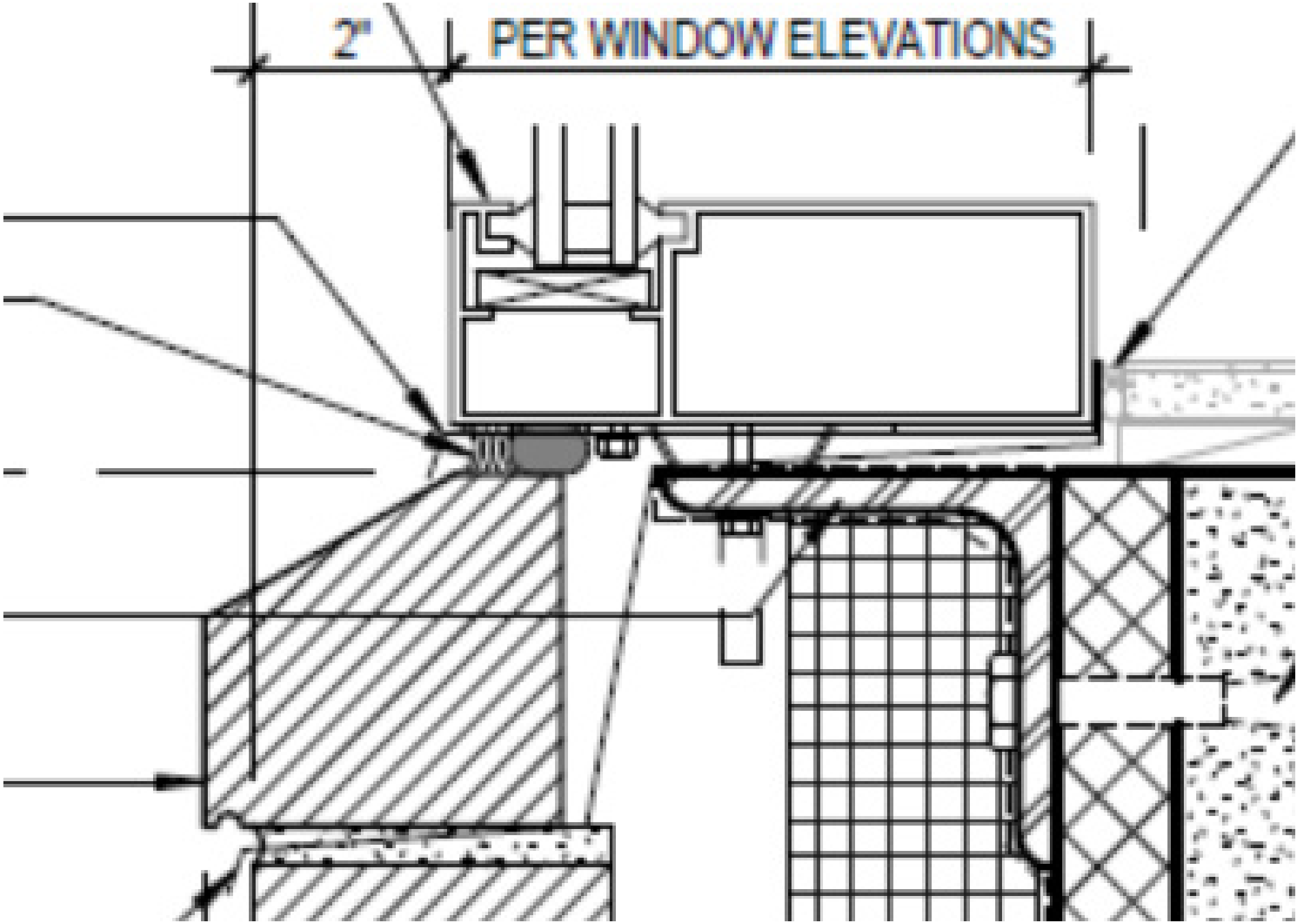
2"
PER WINDOW ELEVATIONS

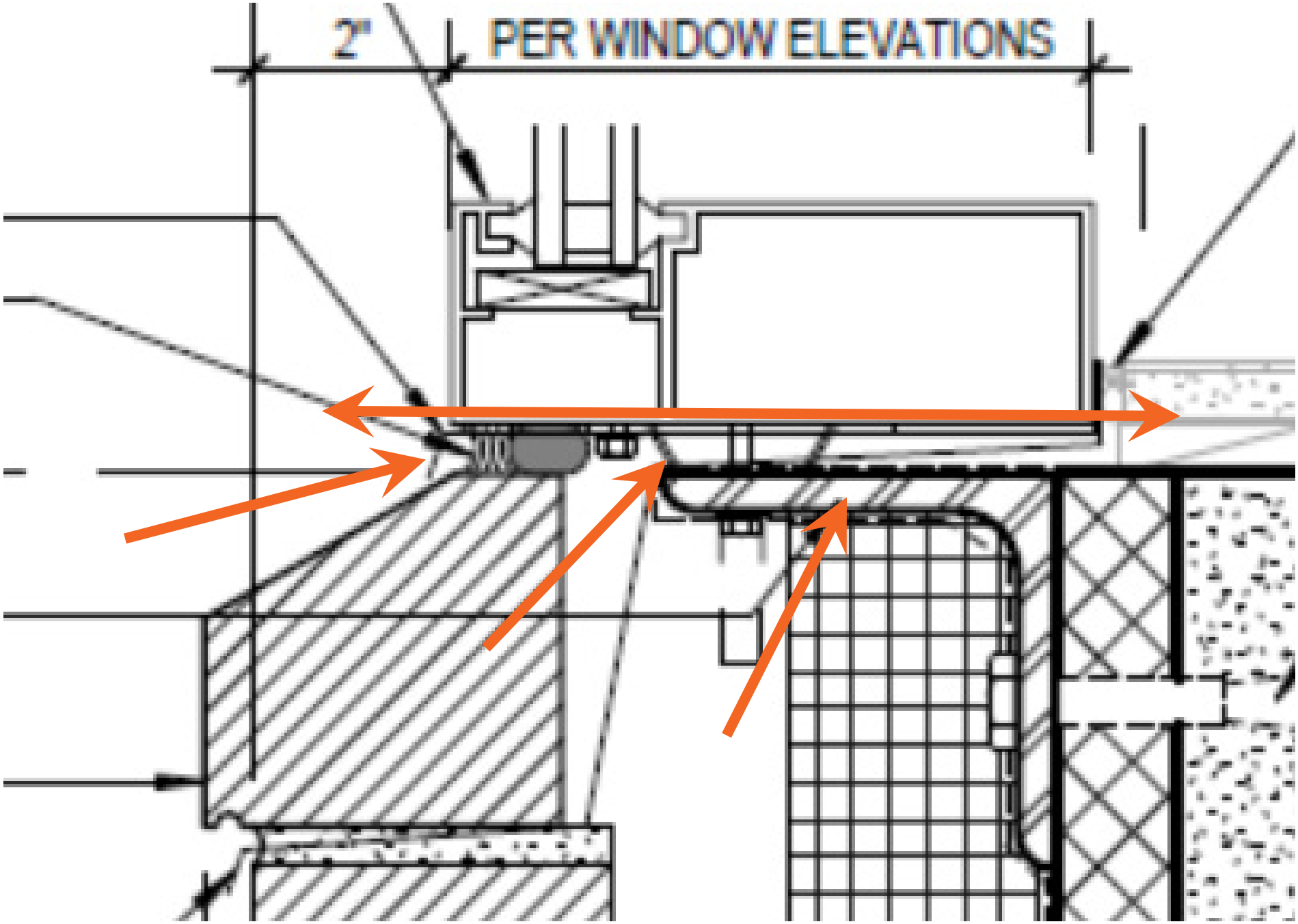
2"
PER WINDOW ELEVATIONS

Don’t Forget the…

- ❑ Foundation Detail
- ❑ Window Systems
- ❑ Storefront Systems
- ❑ Soffits
- ❑ Precast Concrete Walls
- ❑ Insulated Metal Panels
- ❑ Curtain Wall Parapets
- ❑ Transitions between different opaque wall systems
- ❑ Penthouses
- ❑ Balconies
- ❑ Transitions
- ❑ …

Acknowledgements

Katie Gross

and

Ryan Asava

SMITHGROUP JJR
building technology studio

QUESTIONS

Andrew A. Dunlap, AIA
andrew.dunlap@smithgroupjjr.com
313-442-8186

SMITHGROUP JJR
building technology studio